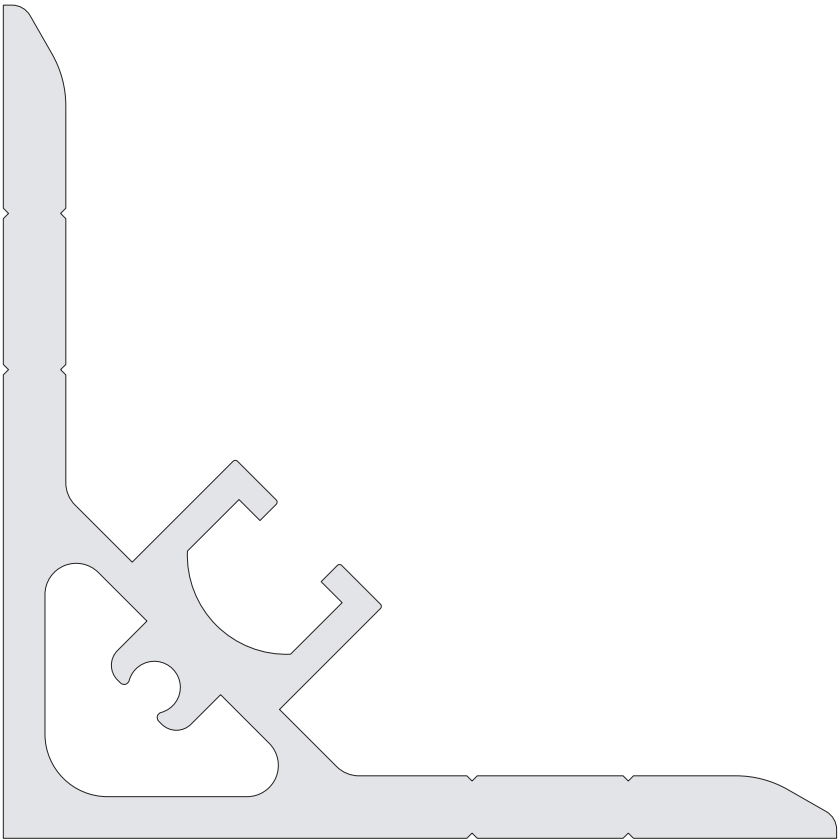

ANGLE

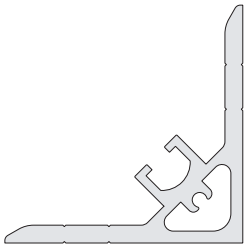

ANGLE DAB 2020 20 X 20

ORDER NUMBER **DY 5046**

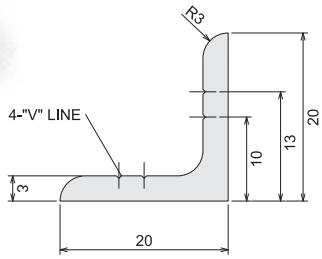

Technical Data (技術 Data)	
Material (材質)	A6063-T5
Surface Processing (表面處理)	Anodized
Weight (重量)	0.294kg/m
Section Area (斷面積)	108.6436mm²
Second Section Moment ((斷面2次 Moment)	lx=0.2x10cm⁴ ly=0.6x10cm⁴
Specification (仕樣)	4,000mm / 6,000mm
Color (色相)	Silver, Black
Application (用途)	Bracket Profile (브라켓용 프로파일)

ANGLE DAB 3030 30 X 30

ORDER NUMBER **DY 5047**

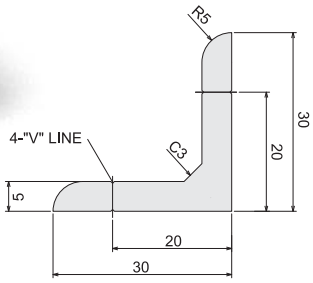

Technical Data (技術 Data)	
Material (材質)	A6063-T5
Surface Processing (表面處理)	Anodized
Weight (重量)	0.727kg/m
Section Area (斷面積)	268.4099mm²
Second Section Moment ((斷面2次 Moment)	lx=0.8x10cm⁴ ly=3.2x10cm⁴
Specification (仕樣)	4,000mm / 6,000mm
Color (色相)	Silver, Black
Application (用途)	Bracket Profile (브라켓용 프로파일)

ANGLE DAB 4040 40 X 40

ORDER NUMBER **DY 5048**

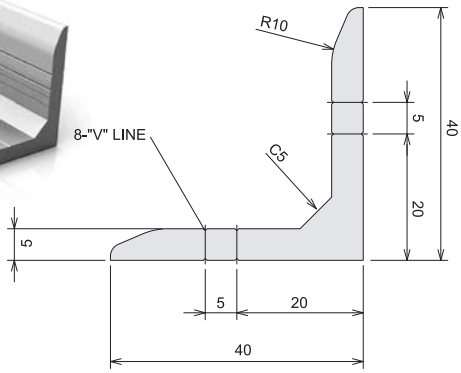

Technical Data (技術 Data)	
Material (材質)	A6063-T5
Surface Processing (表面處理)	Anodized
Weight (重量)	0.988kg/m
Section Area (斷面積)	364.6061mm²
Second Section Moment ((斷面2次 Moment)	lx=2.0x10cm⁴ ly=7.6x10cm⁴
Specification (仕樣)	4,000mm / 6,000mm
Color (色相)	Silver, Black
Application (用途)	Bracket Profile (브라켓용 프로파일)

ANGLE DAB 6045 60 X 45

ORDER NUMBER **DY 5050**

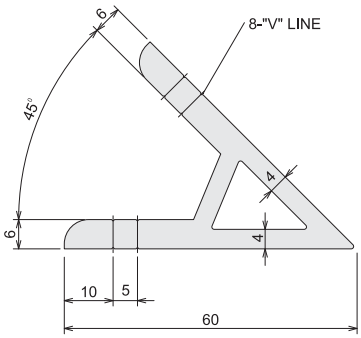

Technical Data (技術 Data)	
Material (材質)	A6063-T5
Surface Processing (表面處理)	Anodized
Weight (重量)	1.635kg/m
Section Area (斷面積)	603.4160mm^2
Second Section Moment (斷面 2次 Moment)	lx=8.4x10cm^4 ly=11.5x10cm^4
Specification (仕樣)	4,000mm / 6,000mm
Color (色相)	Silver, Black
Application (用途)	Bracket Profile (브라켓용 프로파일)

ANGLE DAB 6060 60 X 60

ORDER NUMBER **DY 5162**

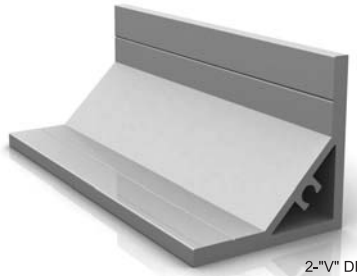

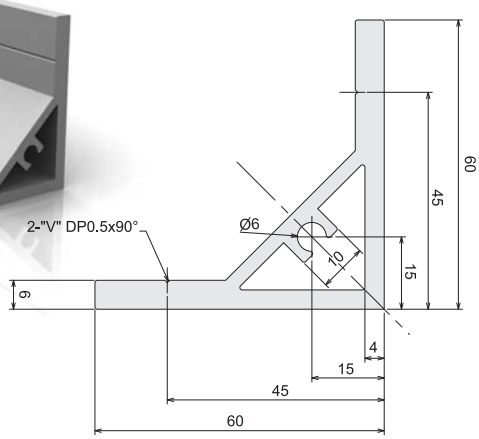

Technical Data (技術 Data)	
Material (材質)	A6063-T5
Surface Processing (表面處理)	Anodized
Weight (重量)	1.956kg/m
Section Area (斷面積)	721.8984mm^2
Second Section Moment (斷面 2次 Moment)	lx=8.5x10cm^4 ly=37.2x10cm^4
Specification (仕樣)	4,000mm / 6,000mm
Color (色相)	Silver, Black
Application (用途)	Bracket Profile (브라켓용 프로파일)

ANGLE DAB 60135 60 X 135

ORDER NUMBER **DY 5049**

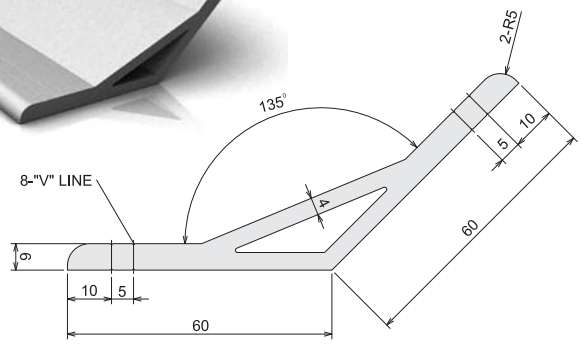

Technical Data (技術 Data)	
Material (材質)	A6063-T5
Surface Processing (表面處理)	Anodized
Weight (重量)	2.111kg/m
Section Area (斷面積)	779.0997mm^2
Second Section Moment (斷面 2次 Moment)	lx=2.8x10cm^4 ly=67.8x10cm^4
Specification (仕樣)	4,000mm / 6,000mm
Color (色相)	Silver, Black
Application (用途)	Bracket Profile (브라켓용 프로파일)

ANGLE DAB 6030 60 X 30

ORDER NUMBER **DY 5193**

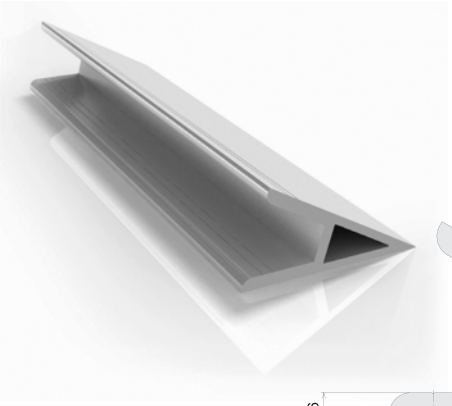

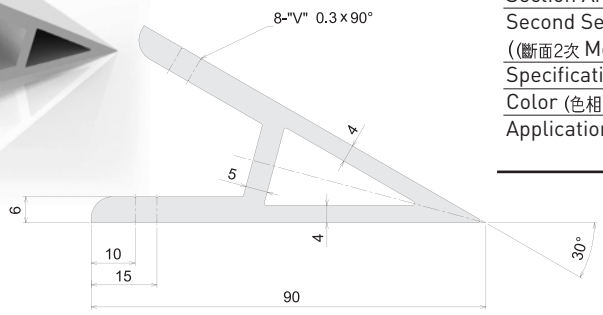

Technical Data (技術 Data)	
Material (材質)	A6063-T5
Surface Processing (表面處理)	Anodized
Weight (重量)	2.401kg/m
Section Area (斷面積)	885.9475mm²
Second Section Moment ((斷面2次 Moment)	Ix=12.87x10cm⁴ Iy=42.08x10cm⁴
Specification (仕樣)	4,000mm / 6,000mm
Color (色相)	Silver, Black
Application (用途)	Bracket Profile (브라켓용 프로파일)

ANGLE DAB 60150 60 X 150

ORDER NUMBER **DY 5194**

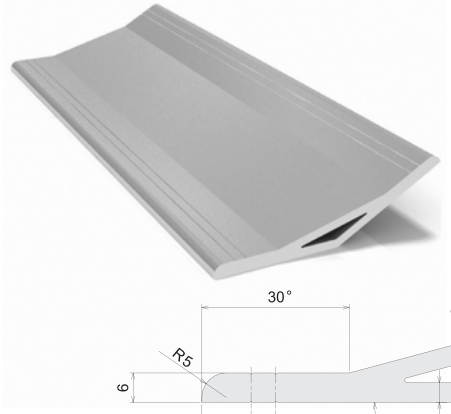

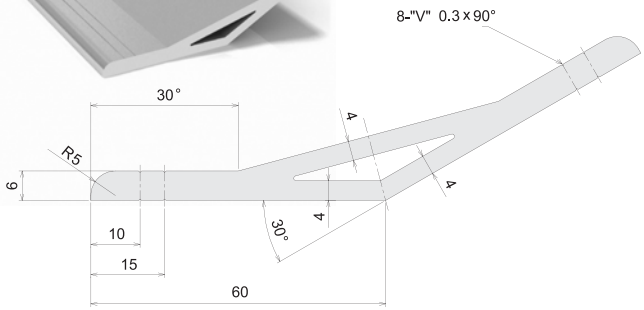

Technical Data (技術 Data)	
Material (材質)	A6063-T5
Surface Processing (表面處理)	Anodized
Weight (重量)	2.152kg/m
Section Area (斷面積)	793.9193mm²
Second Section Moment ((斷面2次 Moment)	Ix=1.45x10cm⁴ Iy=75.84x10cm⁴
Specification (仕樣)	4,000mm / 6,000mm
Color (色相)	Silver, Black
Application (用途)	Bracket Profile (브라켓용 프로파일)

ANGLE DAB 8080 80 X 80

ORDER NUMBER **DY 5052**

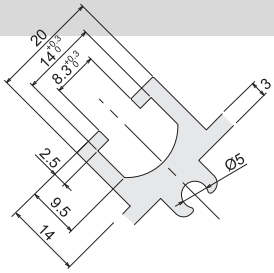

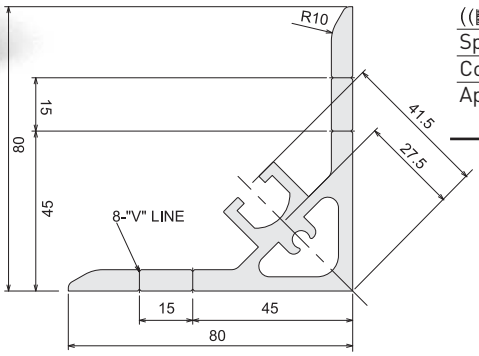

Technical Data (技術 Data)	
Material (材質)	A6063-T5
Surface Processing (表面處理)	Anodized
Weight (重量)	2.981kg/m
Section Area (斷面積)	1,099.8149mm2
Second Section Moment ((斷面2次 Moment)	Ix=20.0x10cm4 Iy=84.7x10cm4
Specification (仕樣)	4,000mm / 6,000mm
Color (色相)	Silver, Black
Application (用途)	Bracket Profile (브라켓용 프로파일)

ANGLE DAF 3090 30 X 90

ORDER NUMBER **DY 5042**

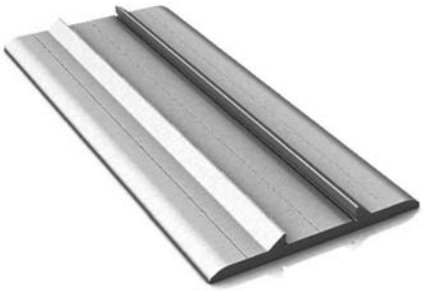

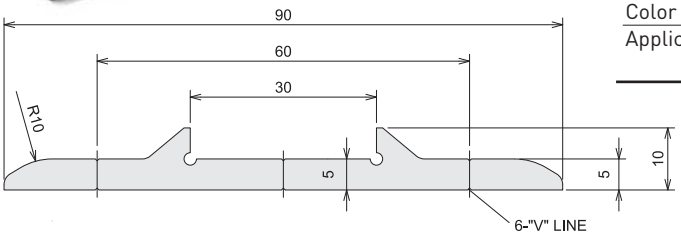

Technical Data (技術 Data)	
Material (材質)	A6063-T5
Surface Processing (表面處理)	Anodized
Weight (重量)	1.269kg/m
Section Area (斷面積)	468.1022mm^2
Second Section Moment (斷面 2次 Moment)	Ix=0.2x10cm^4 Iy=28.3x10cm^4
Specification (仕樣)	4,000mm / 6,000mm
Color (色相)	Silver, Black
Application (用途)	Joint levelling base profile (연결베이스용 프로파일)

ANGLE DAF 40120 40 X 120

ORDER NUMBER **DY 5043**

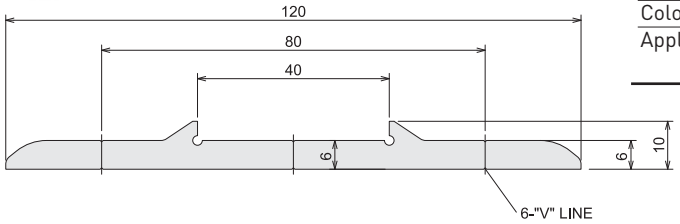

Technical Data (技術 Data)	
Material (材質)	A6063-T5
Surface Processing (表面處理)	Anodized
Weight (重量)	1.962kg/m
Section Area (斷面積)	723.8749mm^2
Second Section Moment (斷面 2次 Moment)	Ix=0.27x10cm^4 Iy=80.1x10cm^4
Specification (仕樣)	4,000mm / 6,000mm
Color (色相)	Silver, Black
Application (用途)	Joint levelling base profile (브라켓용 프로파일)

ANGLE DAF 60120 60 X 120

ORDER NUMBER **DY 5044**

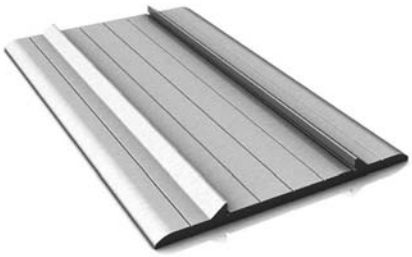

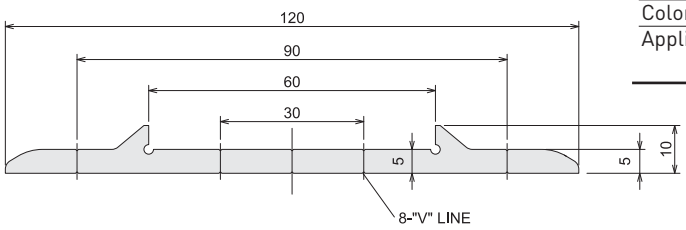

Technical Data (技術 Data)	
Material (材質)	A6063-T5
Surface Processing (表面處理)	Anodized
Weight (重量)	1.674kg/m
Section Area (斷面積)	617.7422mm^2
Second Section Moment (斷面 2次 Moment)	Ix=0.2x10cm^4 Iy=70.0x10cm^4
Specification (仕樣)	4,000mm / 6,000mm
Color (色相)	Silver, Black
Application (用途)	Joint levelling base profile (연결베이스용 프로파일)

ANGLE DAF 80160 80 X 160

ORDER NUMBER **DY 5045**

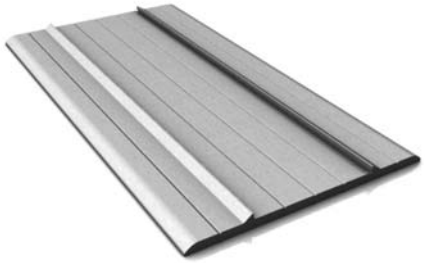

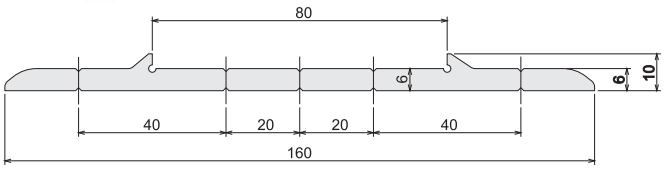

Technical Data (技術 Data)	
Material (材質)	A6063-T5
Surface Processing (表面處理)	Anodized
Weight (重量)	2.589kg/m
Section Area (斷面積)	955.4211mm^2
Second Section Moment (斷面2次 Moment)	lx=0.33x10cm^4 ly=194.2x10cm^4
Specification (仕樣)	4,000mm / 6,000mm
Color (色相)	Silver, Black
Application (用途)	Joint levelling base profile (연결베이스용 프로파일)

ANGLE DJF 1060 5 X 60

ORDER NUMBER **DY 5037**

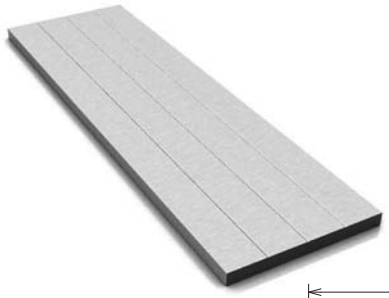

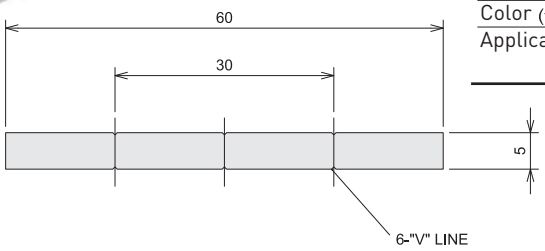

Technical Data (技術 Data)	
Material (材質)	A6063-T5
Surface Processing (表面處理)	Anodized
Weight (重量)	0.812kg/m
Section Area (斷面積)	299.4600mm^2
Second Section Moment (斷面2次 Moment)	lx=0.06x10cm^4 ly=9.0x10cm^4
Specification (仕樣)	4,000mm / 6,000mm
Color (色相)	Silver, Black
Application (用途)	Joint levelling base profile (결합용 프로파일)

DUCT

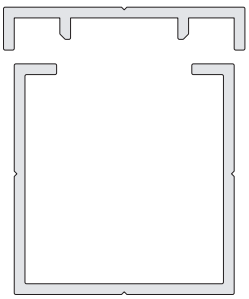

DUCT DAD 3060 30 X 60

ORDER NUMBER **DY 5053**

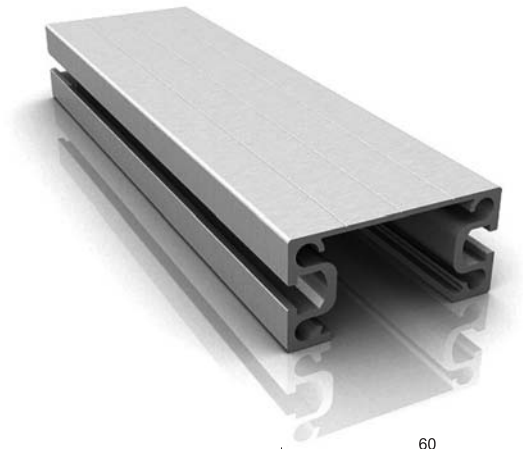

Technical Data (技術 Data)	
Material (材質)	A6063-T5
Surface Processing (表面處理)	Anodized
Weight (重量)	1.084kg/m
Section Area (斷面積)	400.0189mm²
Second Section Moment (斷面2次 Moment)	lx=4.2x10mm⁴ ly=21.2x10mm⁴
Specification (仕樣)	4,000mm / 6,000mm
Color (色相)	Silver
Application (用途)	Duct Profile(Electric Cable, Air Tube, Etc)for DAD3160 (전선, 에어배관용 덕트)

CAD Drawing

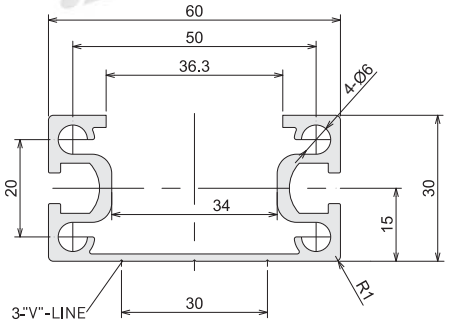

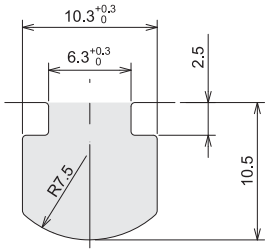

DUCT DAD 3160 31 X 60

ORDER NUMBER **DY 5054**

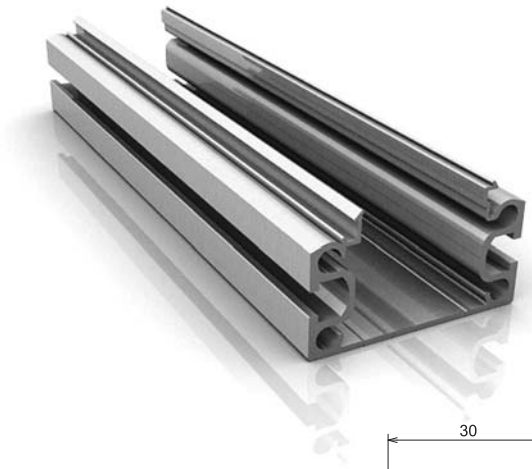

Technical Data (技術 Data)	
Material (材質)	A6063-T5
Surface Processing (表面處理)	Anodized
Weight (重量)	0.991kg/m
Section Area (斷面積)	365.5710mm2
Second Section Moment (斷面2次 Moment)	lx=4.1x10mm4 ly=19.4x10mm4
Specification (仕樣)	4,000mm / 6,000mm
Color (色相)	Silver
Application (用途)	Duct Profile(Electric Cable, Air Tube, Etc)for DAD3060 (전선, 에어배관용 덕트)

CAD Drawing

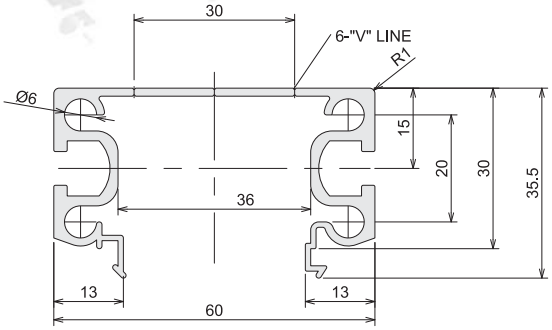

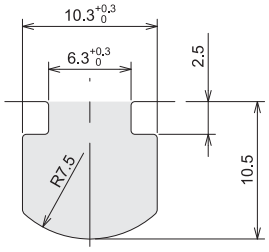

DUCT DAD 4090 40 X 90

ORDER NUMBER **DY 5055**

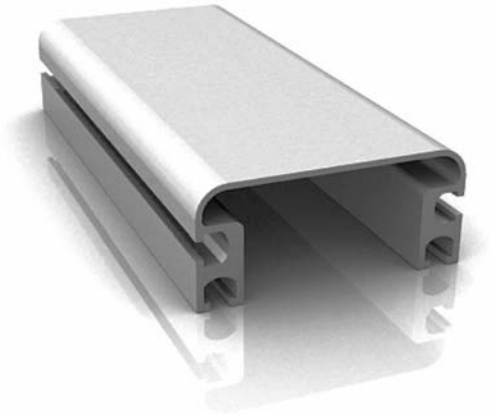

Technical Data (技術 Data)	
Material (材質)	A6063-T5
Surface Processing (表面處理)	Anodized
Weight (重量)	1.810kg/m
Section Area (斷面積)	668.0009mm²
Second Section Moment (斷面2次 Moment)	Ix=10.1x10mm⁴ Iy=78.4x10mm⁴
Specification (仕樣)	4,000mm / 6,000mm
Color (色相)	Silver
Application (用途)	Duct Profile(Electric Cable, Air Tube, Etc) (전선, 에어배관용 닥트)

CAD Drawing

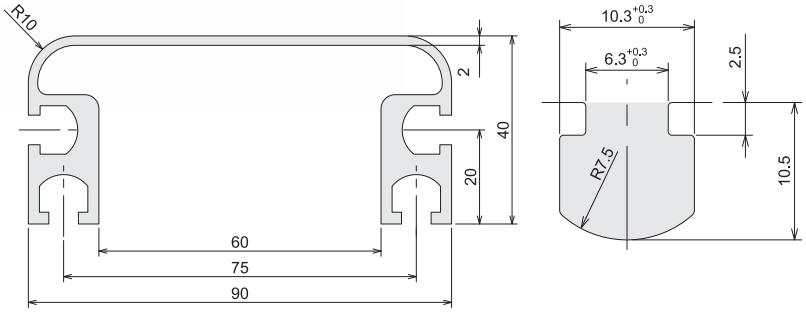

DUCT DAD 4040 40 X 40

ORDER NUMBER		
	CAP	DY 5159
	BASE	DY 5160

Technical Data (技術 Data)	
Material (材質)	A6063-T5
Surface Processing (表面處理)	Anodized
Weight (重量)	C:0.420kg/m / B:0.670kg/m
Specification (仕樣)	C:155.1583mm², B:247.2578mm²
Specification (仕樣)	4,000mm / 6,000mm
Color (色相)	Silver, Black
Application (用途)	Duct Profile(Electric Cable, Air Tube, Etc) (전선, 에어배관용 닥트)

CAD Drawing

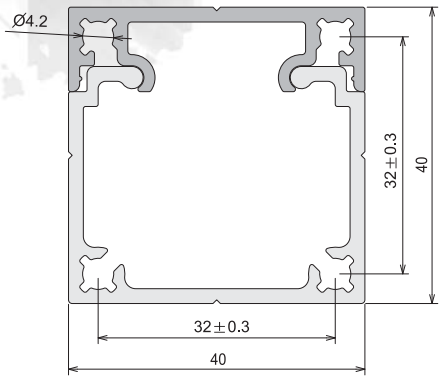

DUCT DAD 4080 40 X 80

ORDER NUMBER		
	CAP	DY 5168
	BASE	DY 5167

Technical Data (技術 Data)	
Material (材質)	A6063-T5
Surface Processing (表面處理)	Anodized
Weight (重量)	C:0.635kg/m / B:0.886kg/m
Specification (仕樣)	C:234.3756mm², B:326.7578mm²
Specification (仕樣)	4,000mm / 6,000mm
Color (色相)	Silver, Black
Application (用途)	Duct Profile(Electric Cable, Air Tube, Etc) (전선, 에어배관용 닥트)

CAD Drawing

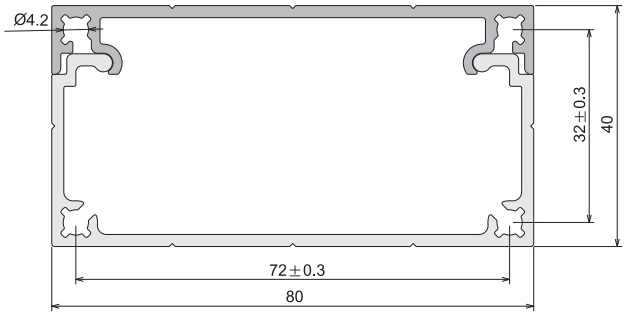

DUCT DAD 4545 45 X 45

ORDER NUMBER		
	CAP	DY 5056
	BASE	DY 5057

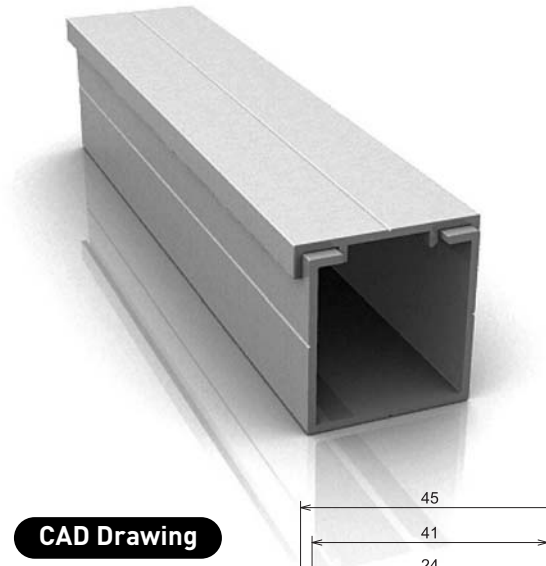

Technical Data (技術 Data)	
Material (材質)	A6063-T5
Surface Processing (表面處理)	Anodized
Weight (重量)	C:0.348kg/m / B:0.728kg/m
Specification (仕樣)	C:128.5877mm², B:268.7727mm²
Specification (仕樣)	4,000mm / 6,000mm
Color (色相)	Silver, Black
Application (用途)	Duct Profile(Electric Cable, Air Tube, Etc) (전선, 에어배관용 닥트)

CAD Drawing

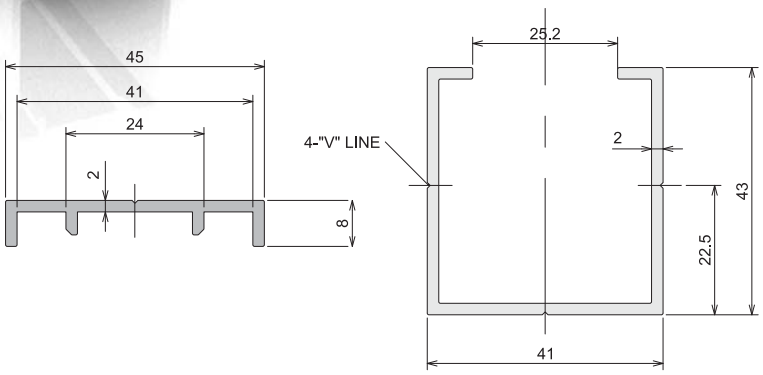

DUCT DAD 6060 60 X 60

ORDER NUMBER		
	CAP	DY 5058
	BASE	DY 5059

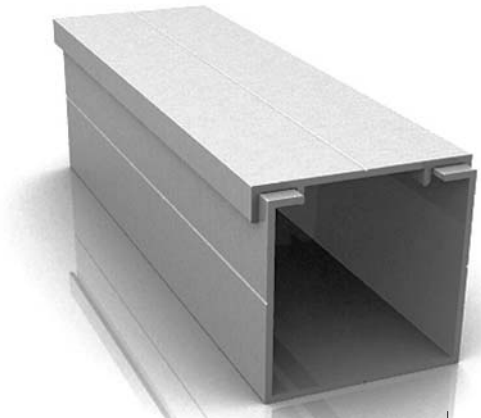

Technical Data (技術 Data)

Material (材質)	A6063-T5
Surface Processing (表面處理)	Anodized
Weight (重量)	C:0.484kg/m / B:1.016kg/m
Specification (仕樣)	C:178.7457mm², B:374.7727mm²
Specification (仕樣)	4,000mm / 6,000mm
Color (色相)	Silver, Black
Application (用途)	Duct Profile(Electric Cable, Air Tube, Etc) (전선, 에어배관용 닥트)

CAD Drawing

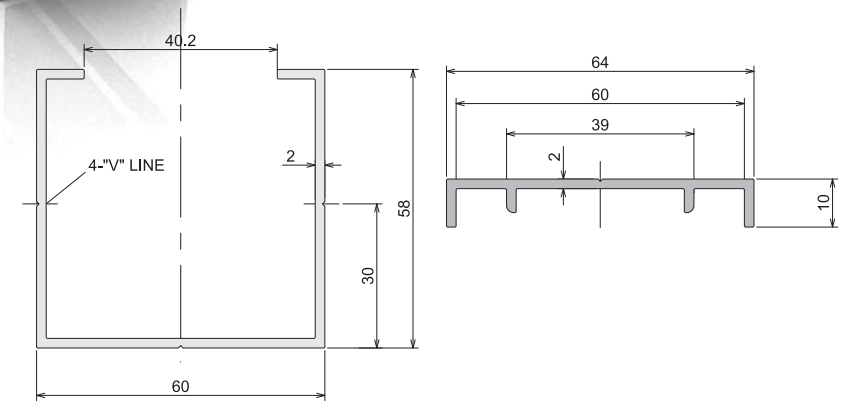

DUCT DAD 8045 80 X 45

ORDER NUMBER		
	CAP	DY 5060
	BASE	DY 5061

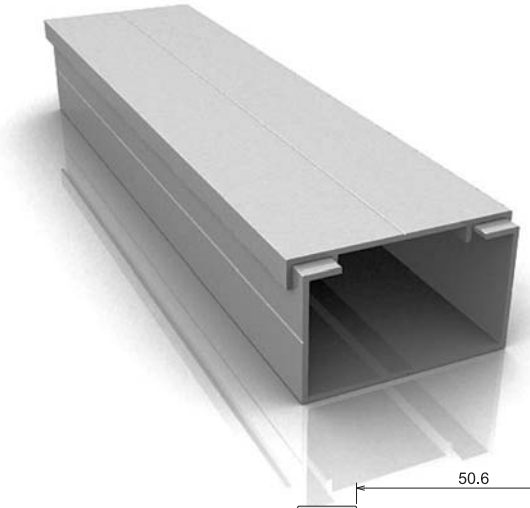

Technical Data (技術 Data)

Material (材質)	A6063-T5
Surface Processing (表面處理)	Anodized
Weight (重量)	C:0.582kg/m / B:0.992kg/m
Specification (仕樣)	C:214.6298mm², B:365.9727mm²
Specification (仕樣)	4,000mm / 6,000mm
Color (色相)	Silver, Black
Application (用途)	Duct Profile(Electric Cable, Air Tube, Etc) (전선, 에어배관용 닥트)

CAD Drawing

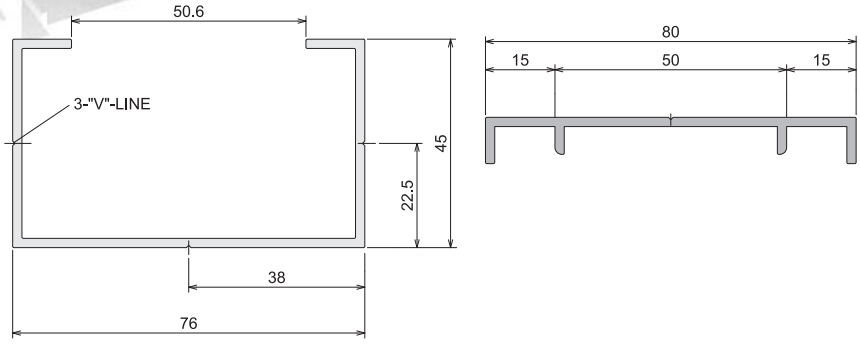

DUCT DAD 8080 80 X 80

ORDER NUMBER	CAP	DY 5126
	BASE	DY 5127

Technical Data (技術 Data)

Material (材質)	A6063-T5
Surface Processing (表面處理)	Anodized
Weight (重量)	C:0.601kg/m / B:1.360kg/m
Specification (仕樣)	C:221.7290mm², B:501.6727mm²
Specification (仕樣)	4,000mm / 6,000mm
Color (色相)	Silver, Black
Application (用途)	Duct Profile(Electric Cable, Air Tube, Etc) (전선, 에어배관용 닥트)

CAD Drawing

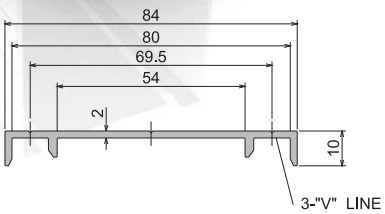

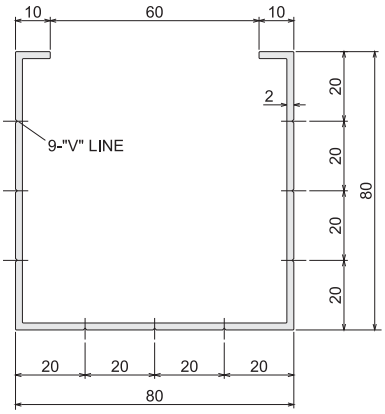

DUCT DAD 8080-1 80 X 80

ORDER NUMBER	CAP	DY 5168
	BASE	DY 5169

Technical Data (技術 Data)

Material (材質)	A6063-T5
Surface Processing (表面處理)	Anodized
Weight (重量)	C:0.635kg/m / B:1.316kg/m
Specification (仕樣)	C:234.3756mm², B:485.7578mm²
Specification (仕樣)	4,000mm / 6,000mm
Color (色相)	Silver, Black
Application (用途)	Duct Profile(Electric Cable, Air Tube, Etc) (전선, 에어배관용 닥트)

CAD Drawing

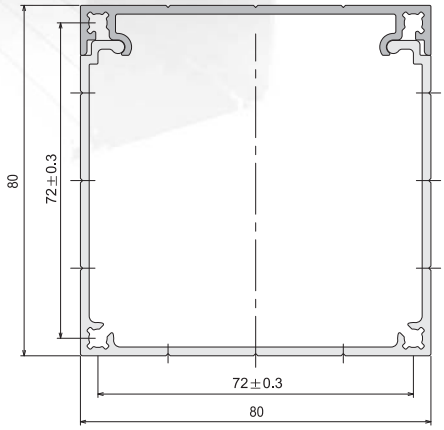

DUCT DAD 100100 100 X 100

ORDER NUMBER		
	CAP	DY 5062
	BASE	DY 5063

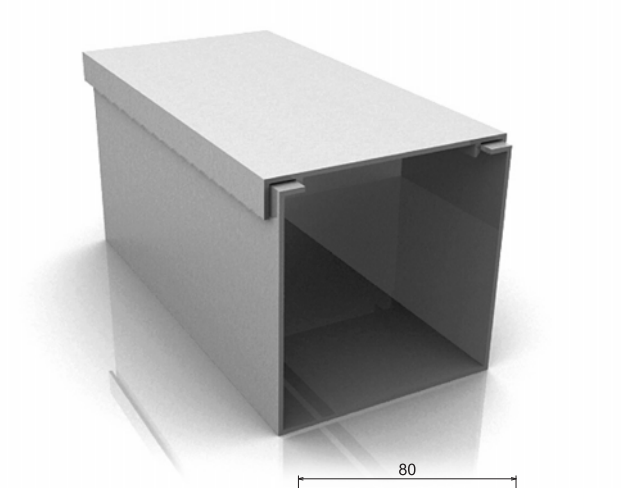

Technical Data (技術 Data)

Material (材質)	A6063-T5
Surface Processing (表面處理)	Anodized
Weight (重量)	C:0.776kg/m / B:1.691kg/m
Specification (仕樣)	C:286.5000mm², B:624.0000mm²
Specification (仕樣)	4,000mm / 6,000mm
Color (色相)	Silver, Black
Application (用途)	Duct Profile(Electric Cable, Air Tube, Etc) (전선, 에어배관용 닥트)

CAD Drawing

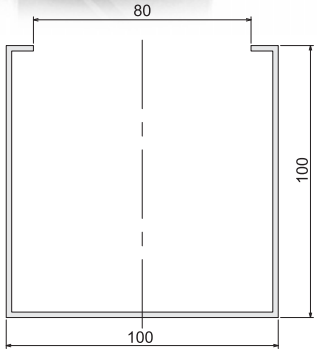

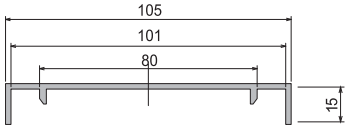

DUCT DAD 10550 105 X 50

ORDER NUMBER		
	CAP	DY 5062
	BASE	DY 5102

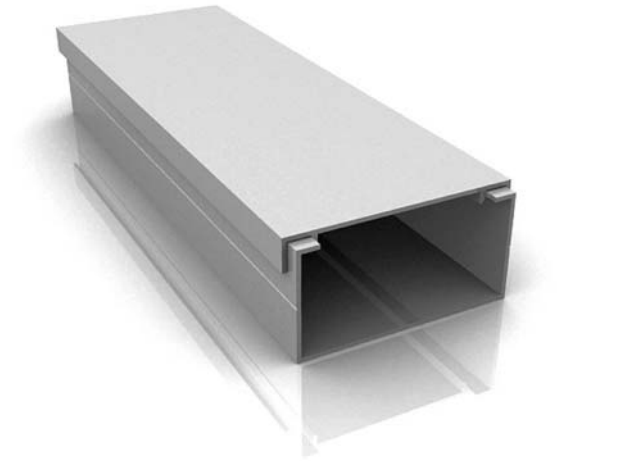

Technical Data (技術 Data)

Material (材質)	A6063-T5
Surface Processing (表面處理)	Anodized
Weight (重量)	C:0.776kg/m / B:1.149kg/m
Specification (仕樣)	C:286.5000mm², B:423.8200mm²
Specification (仕樣)	4,000mm / 6,000mm
Color (色相)	Silver, Black
Application (用途)	Duct Profile(Electric Cable, Air Tube, Etc) (전선, 에어배관용 닥트)

CAD Drawing

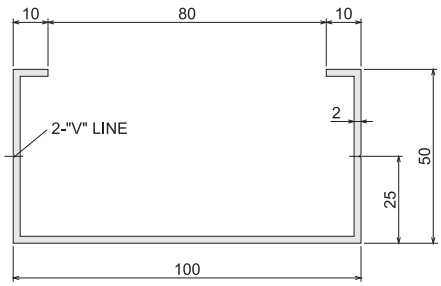

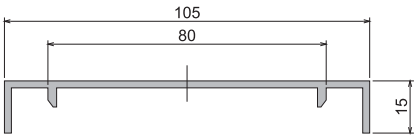

DUCT

DAD 15080 150 X 80

ORDER NUMBER		
	CAP	DY 5145
	BASE	DY 5146

Technical Data (技術 Data)

Material (材質)	A6063-T5
Surface Processing (表面處理)	Anodized
Weight (重量)	C:0.918kg/m / B:1.681kg/m
Specification (仕樣)	C:338.8872mm², B:620.2700mm²
Specification (仕樣)	4,000mm / 6,000mm
Color (色相)	Silver, Black
Application (用途)	Duct Profile(Electric Cable, Air Tube, Etc) (전선, 에어배관용 닥트)

CAD Drawing

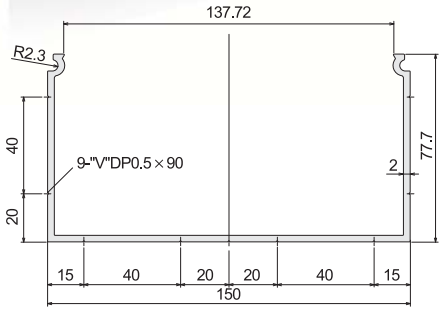

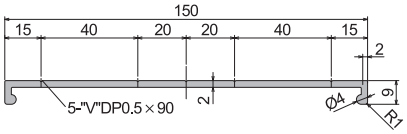

CONVEYOR FRAME

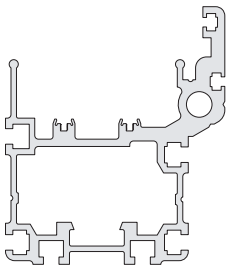

CONVEYOR DC 5326 53 X 26

ORDER NUMBER **DY 5085**

ROLLER CONVEYOR ASSY DWET

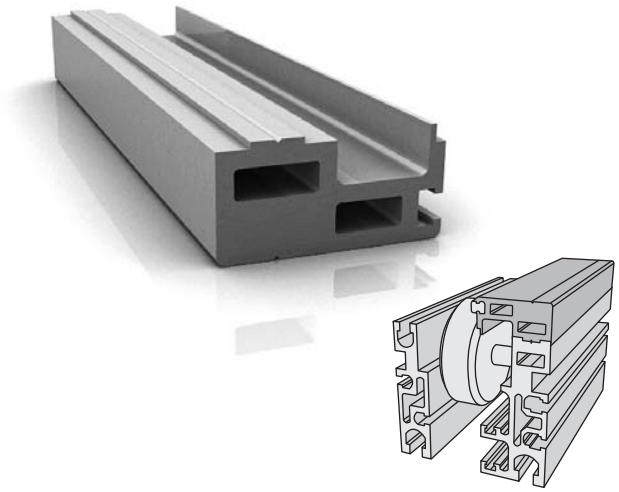

CAD Drawing

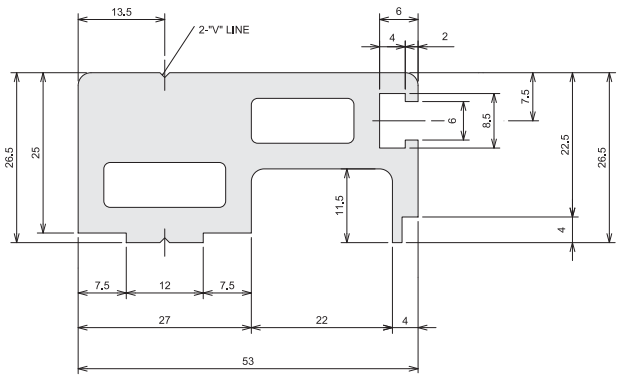

Technical Data (技術 Data)	
Material (材質)	A6063-T5
Surface Processing (表面處理)	Anodized
Weight (重量)	2.246kg/m
Section Area (斷面積)	828.5918mm^2
Application (用途)	Roller conveyor frame (컨베어 프레임)

CONVEYOR DC 11028 110 X 28

ORDER NUMBER **DY 5065**

COVER FRAME

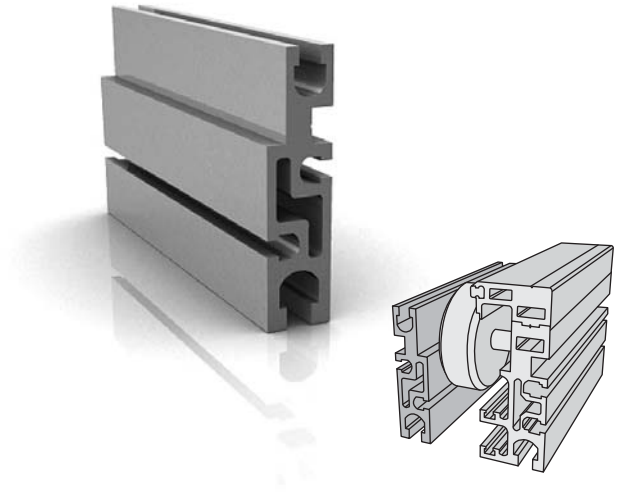

CAD Drawing

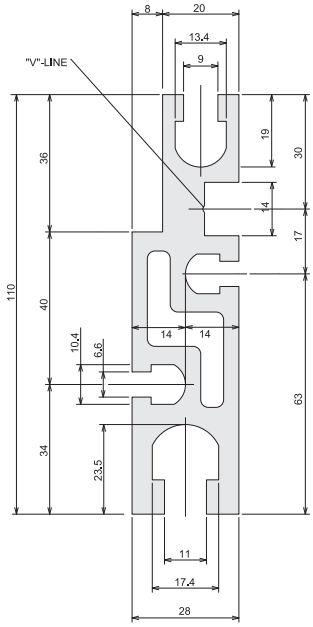

Technical Data (技術 Data)	
Material (材質)	A6063-T5
Surface Processing (表面處理)	Anodized
Weight (重量)	4.151kg/m
Section Area (斷面積)	1,531.5369mm^2
Application (用途)	Roller conveyor frame (컨베어 프레임)

CONVEYOR DC 11050 110 X 50

ORDER NUMBER **DY 5066**

MAIN FRAME

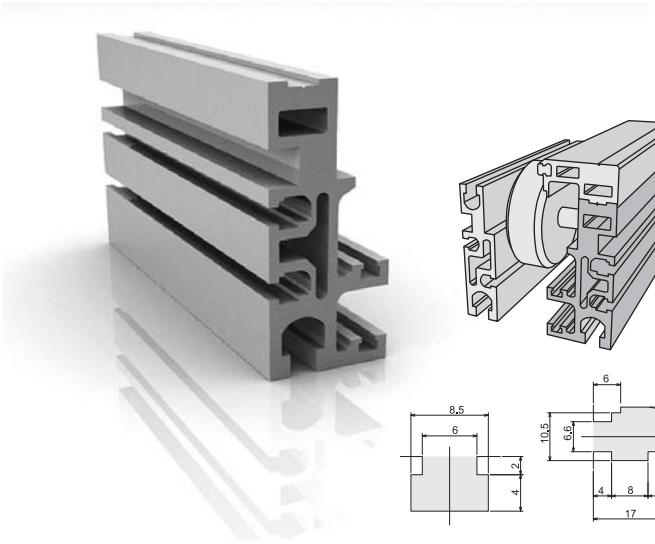

CAD Drawing

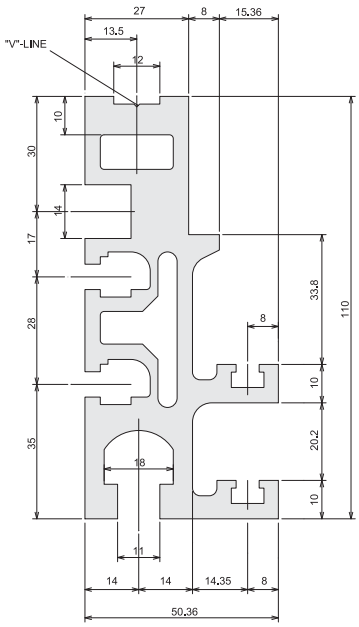

Technical Data (技術 Data)	
Material (材質)	A6063-T5
Surface Processing (表面處理)	Anodized
Weight (重量)	5.553kg/m
Section Area (斷面積)	2,049.1164mm²
Application (用途)	Roller conveyor frame (컨베어 프레임)

CONVEYOR DC 1612 141 X 120

ORDER NUMBER **DY 1612**

MAIN FRAME

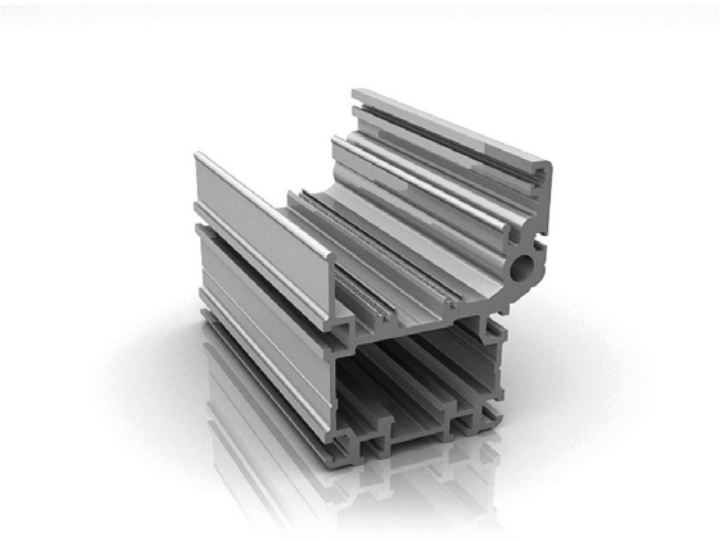

CAD Drawing

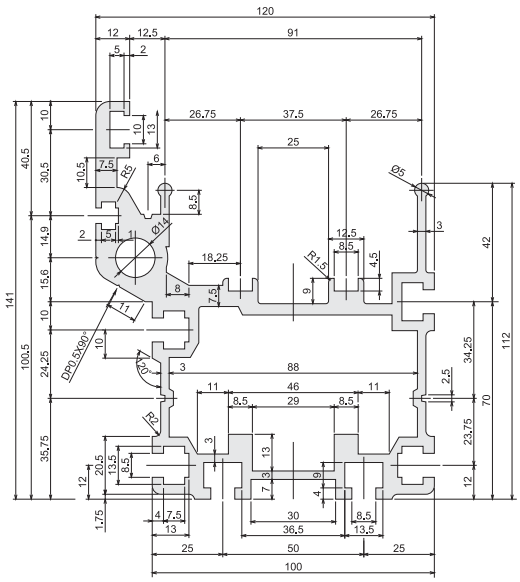

Technical Data (技術 Data)	
Material (材質)	A6063-T5
Surface Processing (表面處理)	Anodized
Weight (重量)	7.823kg/m
Section Area (斷面積)	2,886.6339mm²
Application (用途)	RF2080 chain conveyor frame (체인 컨베어 프레임)

CONVEYOR DC 1005 141 X 120

ORDER NUMBER **DY 1005**

CAD Drawing

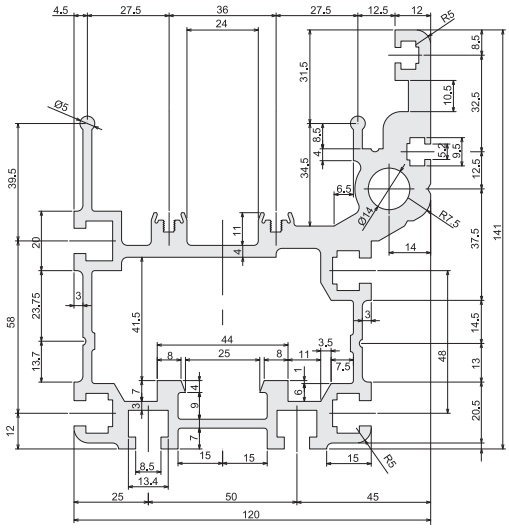

Technical Data (技術 Data)	
Material (材質)	A6063-T5
Surface Processing (表面處理)	Anodized
Weight (重量)	7.981kg/m
Section Area (斷面積)	2,945.1028mm²
Application (用途)	RF2080 chain conveyor frame (체인 컨베어 프레임)

CONVEYOR DC 1006 125 X 100

ORDER NUMBER **DY 1006**

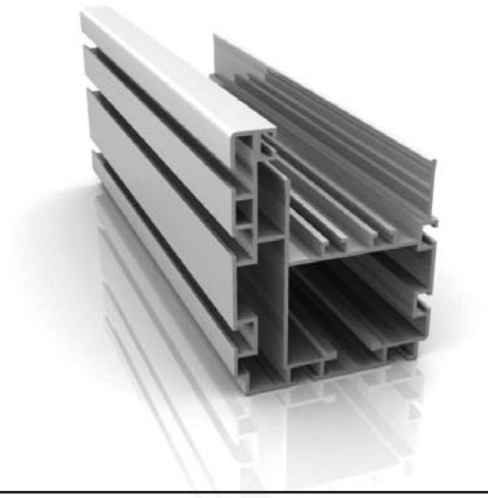

CAD Drawing

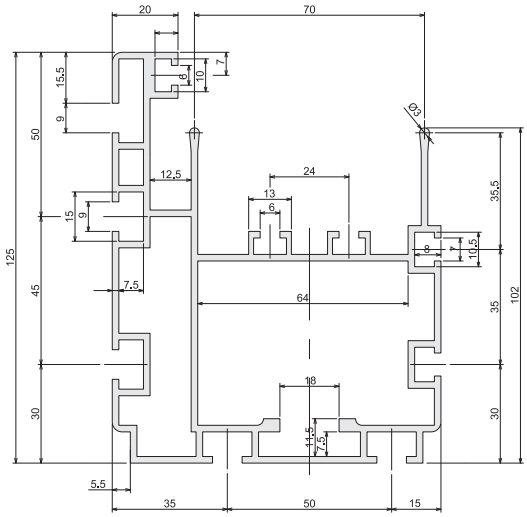

Technical Data (技術 Data)	
Material (材質)	A6063-T5
Surface Processing (表面處理)	Anodized
Weight (重量)	4.062kg/m
Section Area (斷面積)	1,498.7102mm²
Application (用途)	RF2060 chain conveyor frame (체인 컨베어 프레임)

CONVEYOR DC 1024 145 X 118

ORDER NUMBER **DY 5075**

CAD Drawing

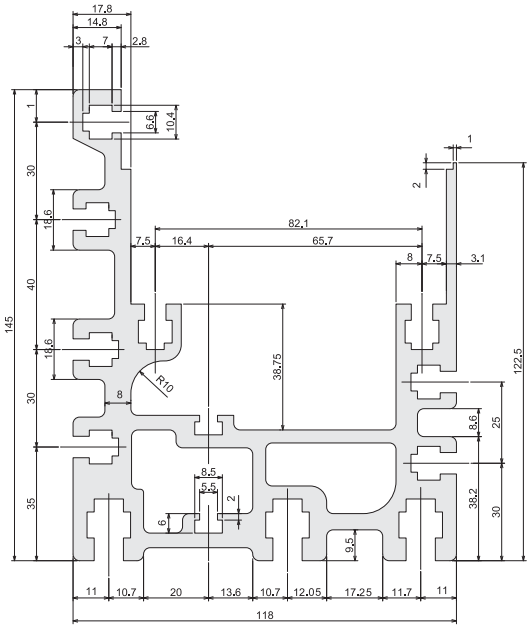

Technical Data (技術 Data)	
Material (材質)	A6063-T5
Surface Processing (表面處理)	Anodized
Weight (重量)	10.072kg/m
Section Area (斷面積)	3,716.5985mm^2
Application (用途)	FRICTION Roller conveyor frame (컨베어 프레임)

CONVEYOR DC 2590 25 X 90

ORDER NUMBER **DY 5077**

CAD Drawing

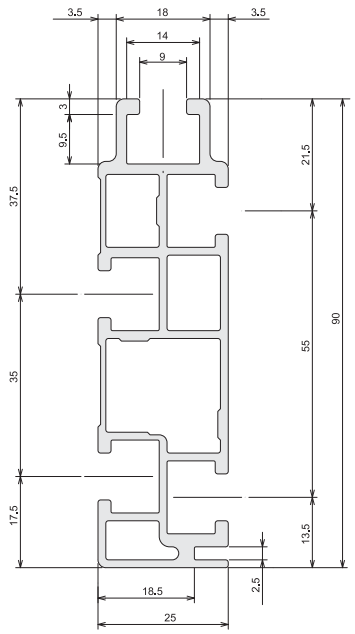

Technical Data (技術 Data)	
Material (材質)	A6063-T5
Surface Processing (表面處理)	Anodized
Weight (重量)	1.506kg/m
Section Area (斷面積)	555.8052mm^2
Application (用途)	Belt conveyor frame (벨트 컨베어 프레임)

CONVEYOR DC 25130 23 X 130

ORDER NUMBER **DY 5076**

CAD Drawing

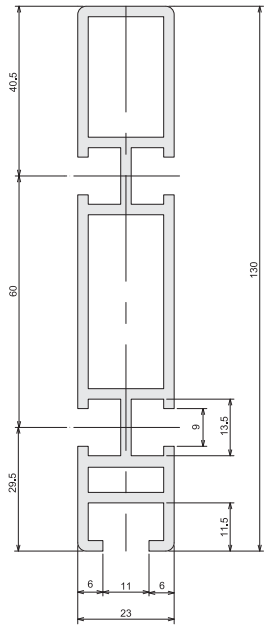

Technical Data (技術 Data)	
Material (材質)	A6063-T5
Surface Processing (表面處理)	Anodized
Weight (重量)	2.483kg/m
Section Area (斷面積)	916.0664mm²
Application (用途)	conveyor frame (컨베어 프레임)

CONVEYOR DC 3390 33 X 90

ORDER NUMBER **DY 5079**

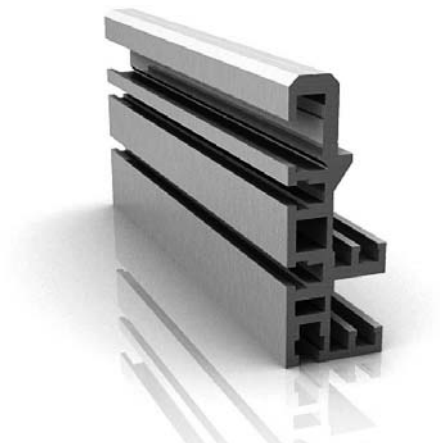

CAD Drawing

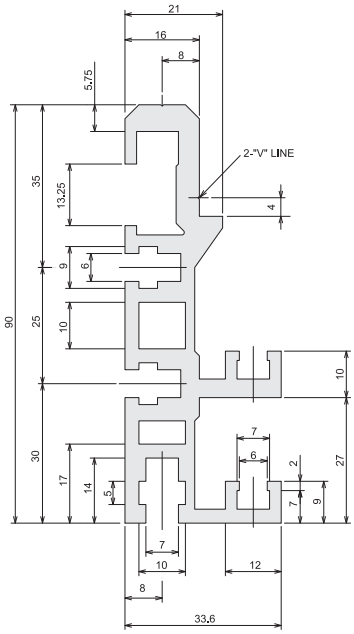

Technical Data (技術 Data)	
Material (材質)	A6063-T5
Surface Processing (表面處理)	Anodized
Weight (重量)	2.574kg/m
Section Area (斷面積)	949.8768mm²
Application (用途)	Roller conveyor frame (컨베어 프레임)

CONVEYOR DC 4024 40 X 24

ORDER NUMBER **DY 5080**

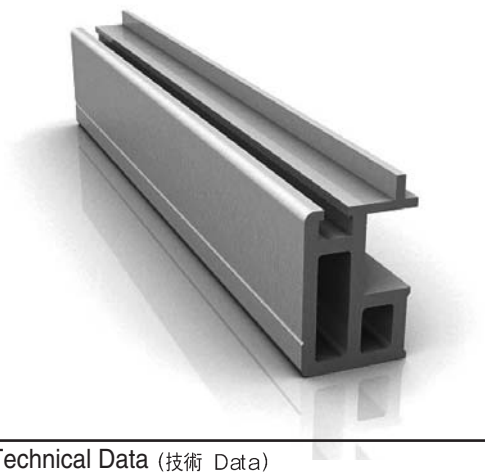

CAD Drawing

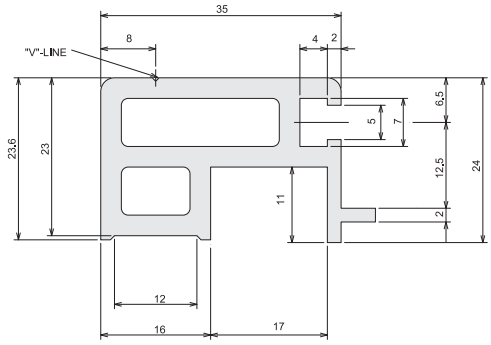

Technical Data (技術 Data)	
Material (材質)	A6063-T5
Surface Processing (表面處理)	Anodized
Weight (重量)	1.029kg/m
Section Area (斷面積)	379.7900mm^2
Application (用途)	Pallet guide rail (파렛트 가이드 컨베어 프레임)

CONVEYOR DC 4073 40 X 73

ORDER NUMBER **DY 5081**

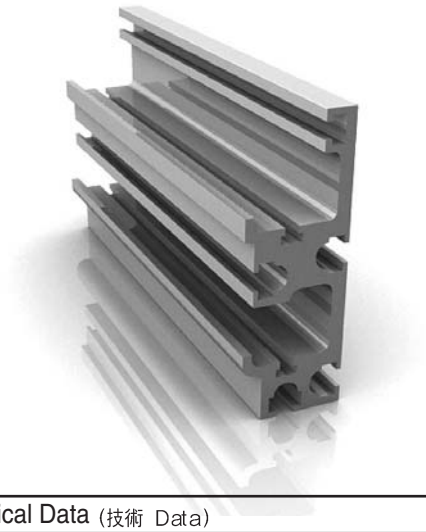

CAD Drawing

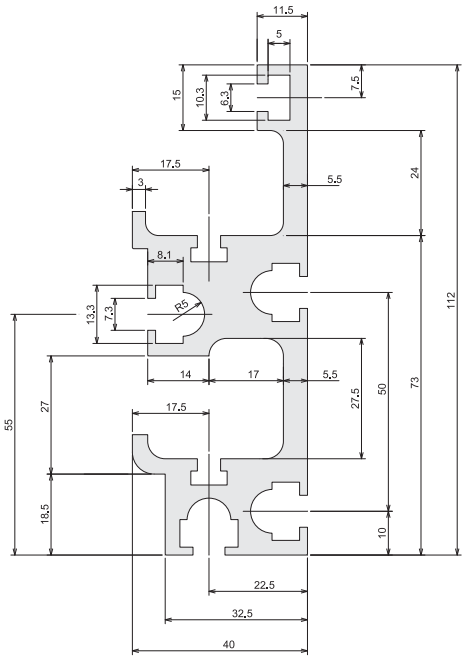

Conveyor Frame

CONVEYOR DC 43122 43 X 122

ORDER NUMBER **DY 5082**

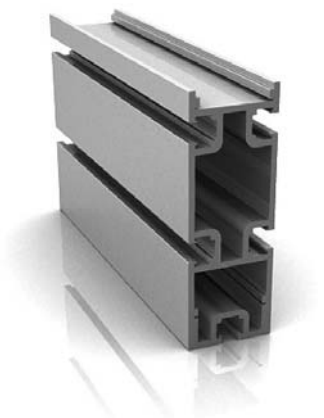

CAD Drawing

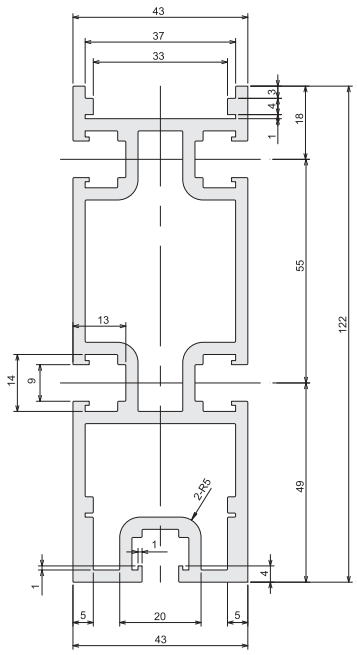

Technical Data (技術 Data)	
Material (材質)	A6063-T5
Surface Processing (表面處理)	Anodized
Weight (重量)	4.027kg/m
Section Area (斷面積)	1,485.9256mm²
Application (用途)	Belt conveyor frame (벨트 컨베어 프레임)

CONVEYOR DC 4570 45 X 70

ORDER NUMBER **DY 5083**

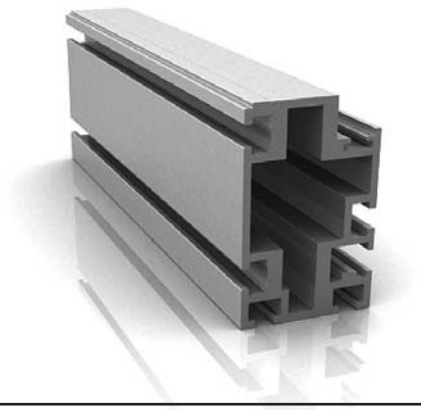

CAD Drawing

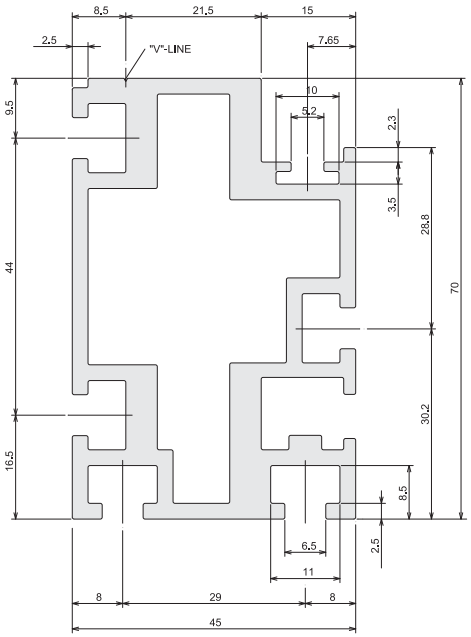

Technical Data (技術 Data)	
Material (材質)	A6063-T5
Surface Processing (表面處理)	Anodized
Weight (重量)	2.675kg/m
Section Area (斷面積)	987.1857mm²
Application (用途)	PCB insert conveyor frame (PCB insert 컨베어 프레임)

CONVEYOR DC 3045 30 X 45

ORDER NUMBER **DY 5078**

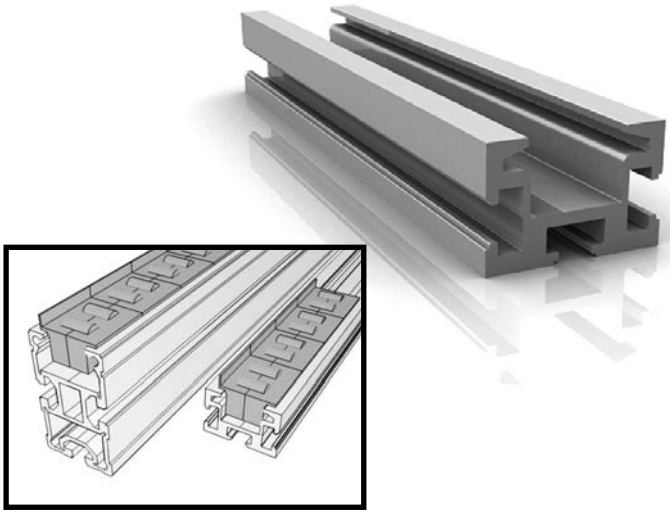

CAD Drawing

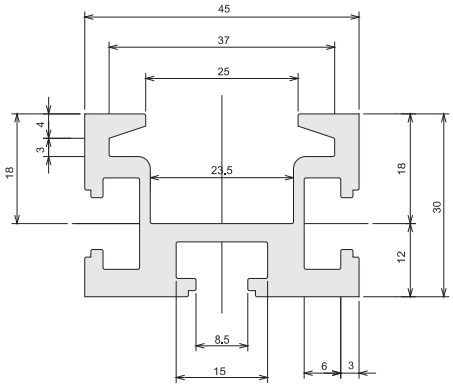

Technical Data (技術 Data)	
Material (材質)	A6063-T5
Surface Processing (表面處理)	Anodized
Weight (重量)	1.389kg/m
Section Area (斷面積)	512.7233mm²
Application (用途)	Roller conveyor frame (컨베어 프레임)

CONVEYOR DC 4575 45 X 75

ORDER NUMBER **DY 5084**

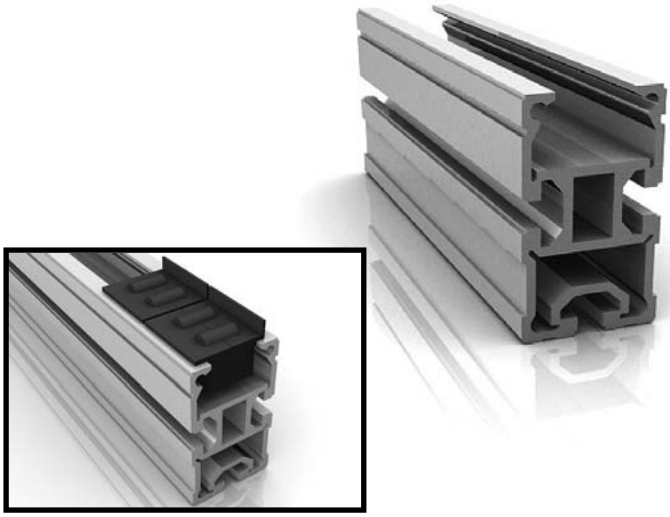

CAD Drawing

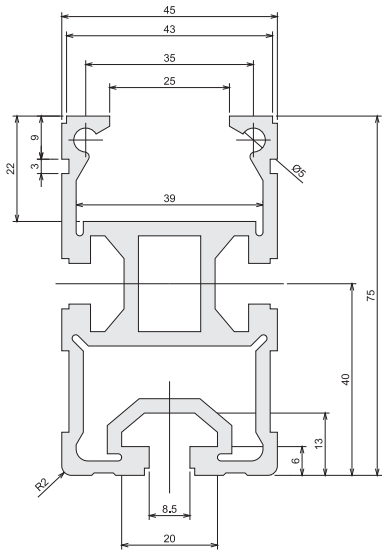

Technical Data (技術 Data)	
Material (材質)	A6063-T5
Surface Processing (表面處理)	Anodized
Weight (重量)	3.035kg/m
Section Area (斷面積)	1,119.9791mm²
Application (用途)	Twin conveyor frame

CONVEYOR DC 6218 62 X 18

ORDER NUMBER **DY 5086**

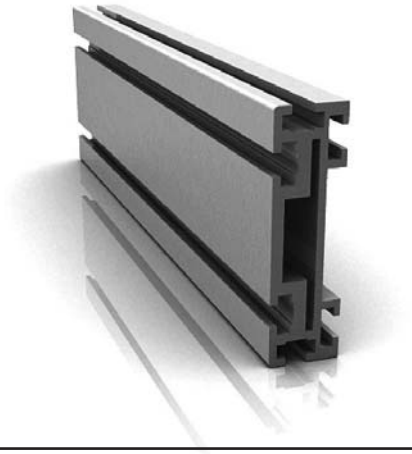

CAD Drawing

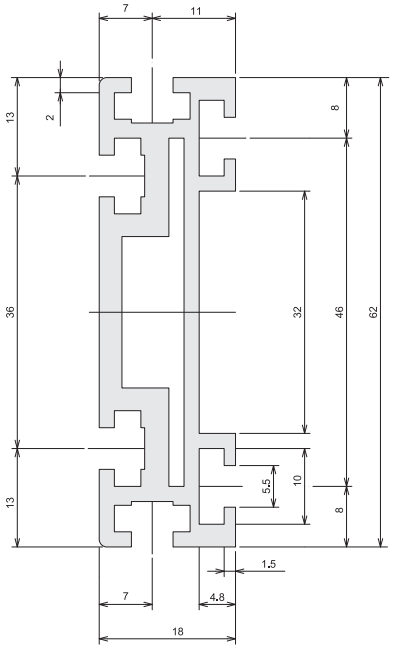

Technical Data (技術 Data)	
Material (材質)	A6063-T5
Surface Processing (表面處理)	Anodized
Weight (重量)	1.270kg/m
Section Area (斷面積)	468.4708mm^2
Application (用途)	conveyor frame (컨베어 프레임)

CONVEYOR DC 6390 63 X 90

ORDER NUMBER **DY 5161**

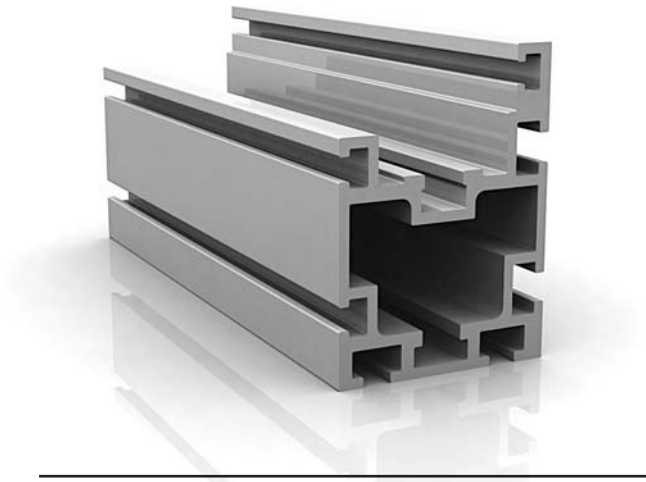

CAD Drawing

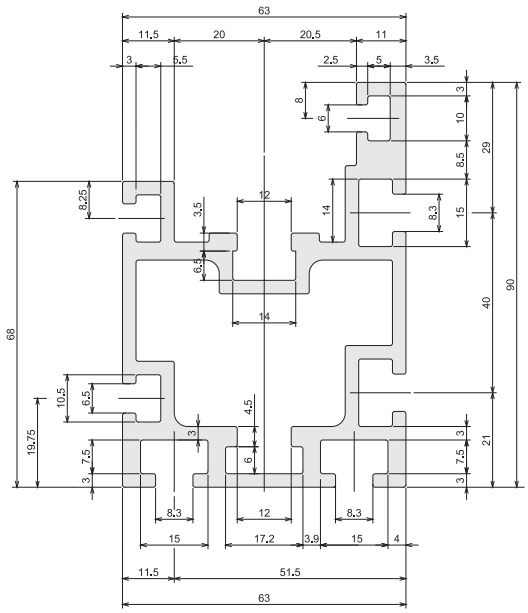

Technical Data (技術 Data)	
Material (材質)	A6063-T5
Surface Processing (表面處理)	Anodized
Weight (重量)	3.702kg/m
Section Area (斷面積)	1,366.1574mm^2
Application (用途)	RF2040 VRP chain conveyor frame (체인 컨베어 프레임)

CONVEYOR DC 6590 65 X 90

ORDER NUMBER **DY 5087**

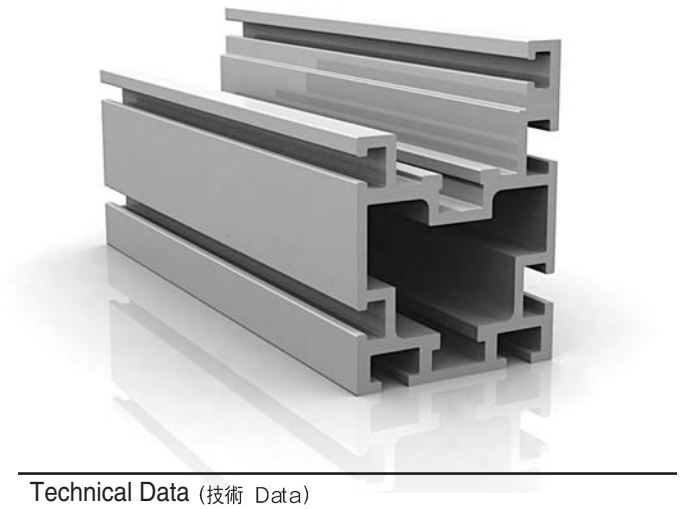

CAD Drawing

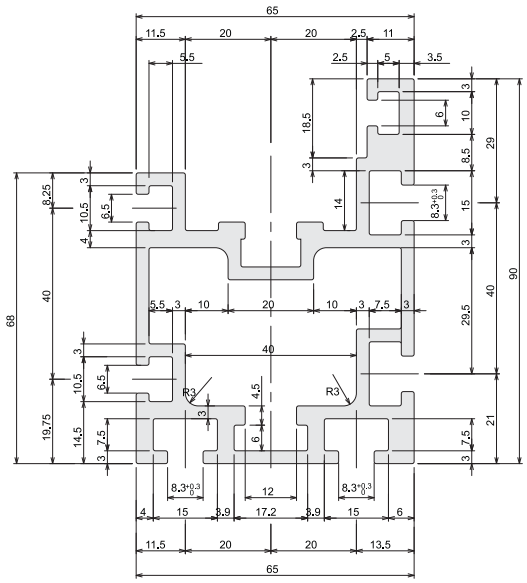

Technical Data (技術 Data)	
Material (材質)	A6063-T5
Surface Processing (表面處理)	Anodized
Weight (重量)	3.797kg/m
Section Area (斷面積)	1,401.1038mm²
Application (用途)	RF2040 VRP chain conveyor frame (체인 컨베어 프레임)

CONVEYOR DC 6630 66 X 30

ORDER NUMBER **DY 5088**

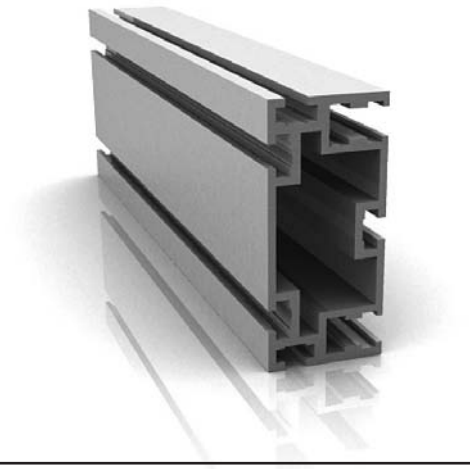

CAD Drawing

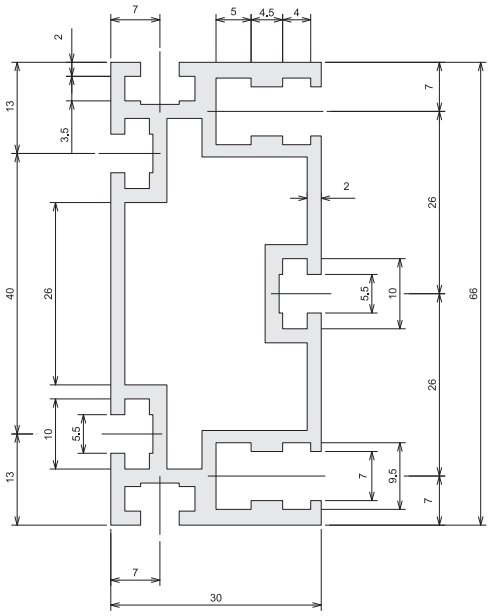

Technical Data (技術 Data)	
Material (材質)	A6063-T5
Surface Processing (表面處理)	Anodized
Weight (重量)	1.556kg/m
Section Area (斷面積)	574.2500mm²
Application (用途)	PCB insert conveyor frame (PCB insert 컨베어 프레임)

CONVEYOR DC 7645 76 X 45

ORDER NUMBER **DY 5089**

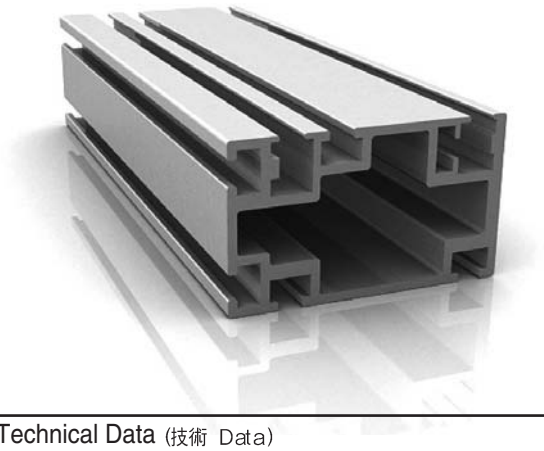

CAD Drawing

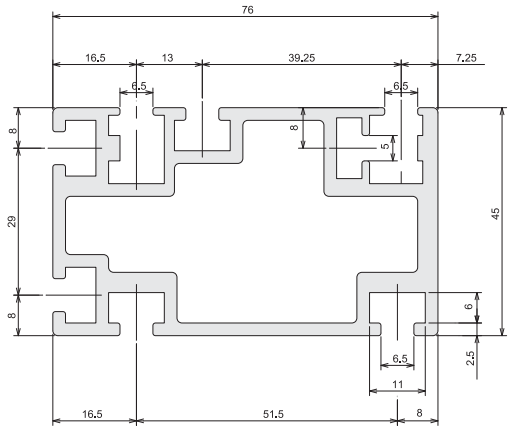

Technical Data (技術 Data)	
Material (材質)	A6063-T5
Surface Processing (表面處理)	Anodized
Weight (重量)	2.580kg/m
Section Area (斷面積)	950.5332mm^2
Application (用途)	PCB insert conveyor frame (PCB insert 컨베어 프레임)

CONVEYOR DC 80100 80 X 100

ORDER NUMBER **DY 5090**

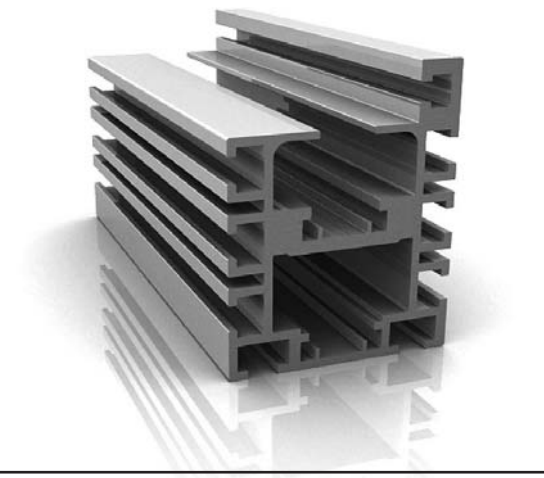

CAD Drawing

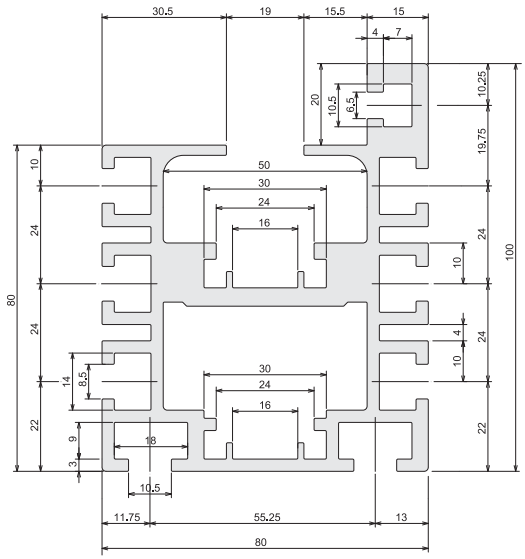

Technical Data (技術 Data)	
Material (材質)	A6063-T5
Surface Processing (表面處理)	Anodized
Weight (重量)	5.667kg/m
Section Area (斷面積)	2,091.1915mm^2
Application (用途)	RF2050 chain conveyor frame (체인 컨베어 프레임)

CONVEYOR DC 85110 85 X 110

ORDER NUMBER **DY 5091**

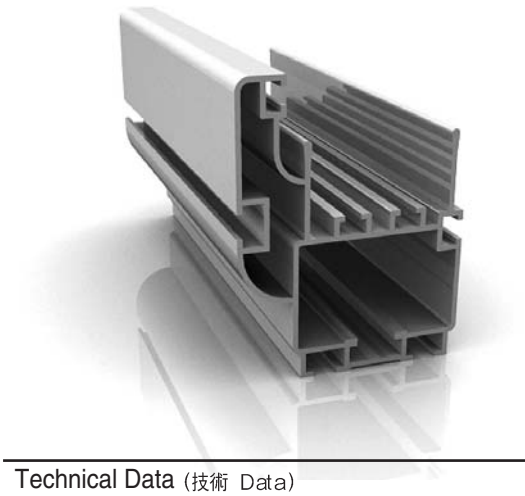

CAD Drawing

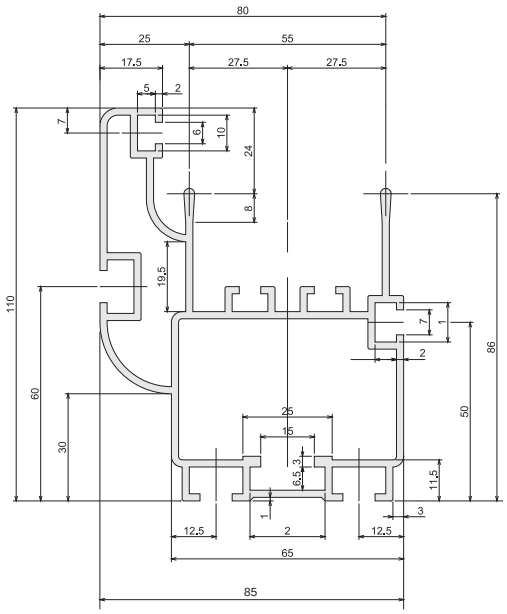

Technical Data (技術 Data)	
Material (材質)	A6063-T5
Surface Processing (表面處理)	Anodized
Weight (重量)	3.081kg/m
Section Area (斷面積)	1,137.0297mm^2
Application (用途)	RF2050 chain conveyor frame (체인 컨베어 프레임)

CONVEYOR DC 10080 100 X 80

ORDER NUMBER **DY 5069**

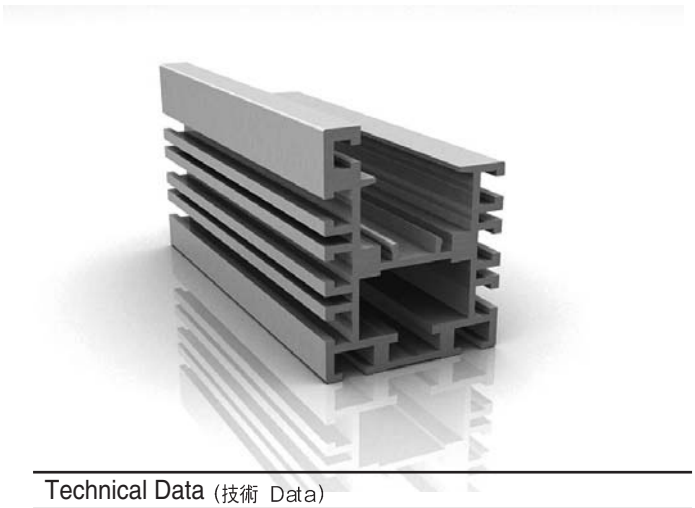

CAD Drawing

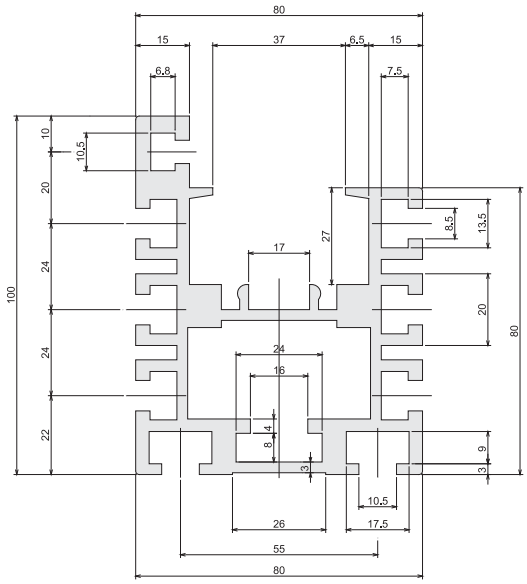

Technical Data (技術 Data)	
Material (材質)	A6063-T5
Surface Processing (表面處理)	Anodized
Weight (重量)	5.659kg/m
Section Area (斷面積)	2,088.0937mm^2
Application (用途)	RF2050 chain conveyor frame (컨베어 프레임)

CONVEYOR DC 100125 100 X 125

ORDER NUMBER **DY 5070**

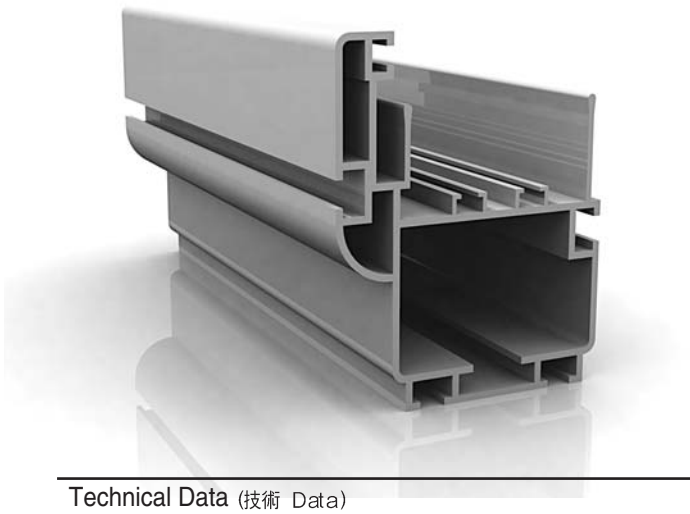

CAD Drawing

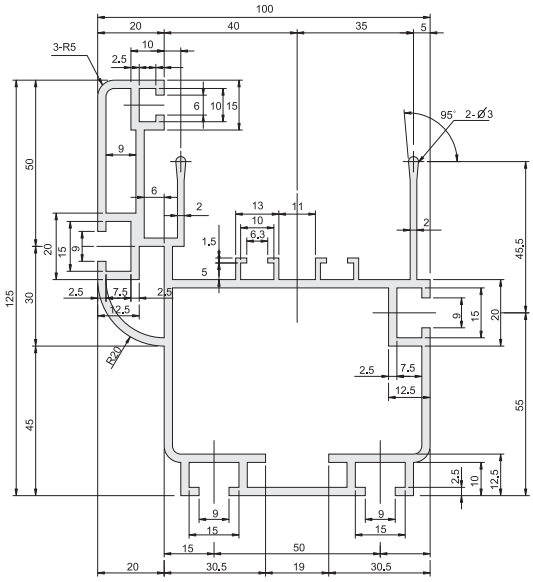

Technical Data (技術 Data)	
Material (材質)	A6063-T5
Surface Processing (表面處理)	Anodized
Weight (重量)	4.174kg/m
Section Area (斷面積)	1,540.1973mm^2
Application (用途)	RF2050 chain conveyor frame (체인 컨베어 프레임)

CONVEYOR DC 10348 103 X 48

ORDER NUMBER **DY 5067**

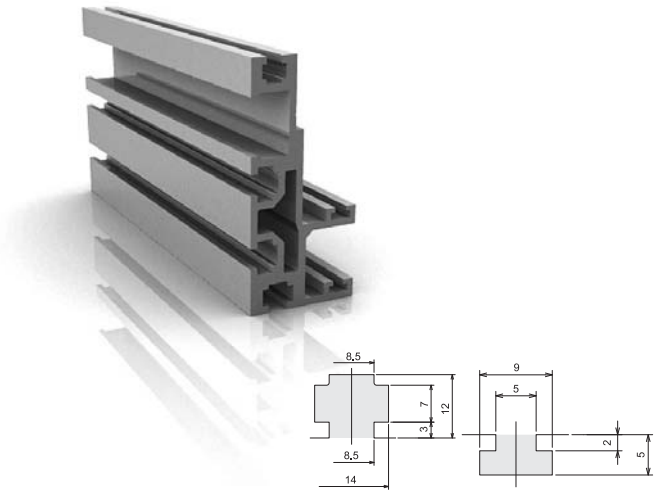

CAD Drawing

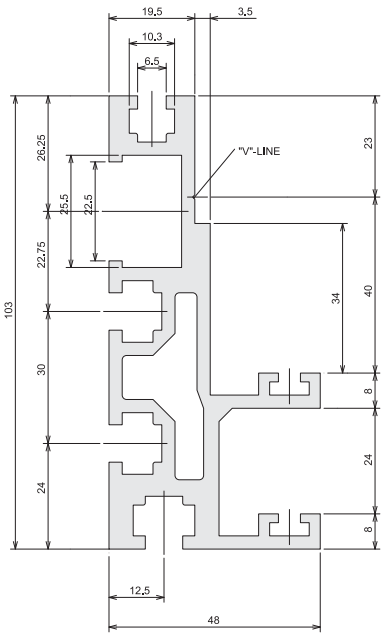

Technical Data (技術 Data)	
Material (材質)	A6063-T5
Surface Processing (表面處理)	Anodized
Weight (重量)	3.358kg/m
Section Area (斷面積)	1,239.2425mm^2
Application (用途)	Roller conveyor frame (체인 컨베어 프레임)

CONVEYOR DC 12190 121 X 90

ORDER NUMBER **DY 5068**

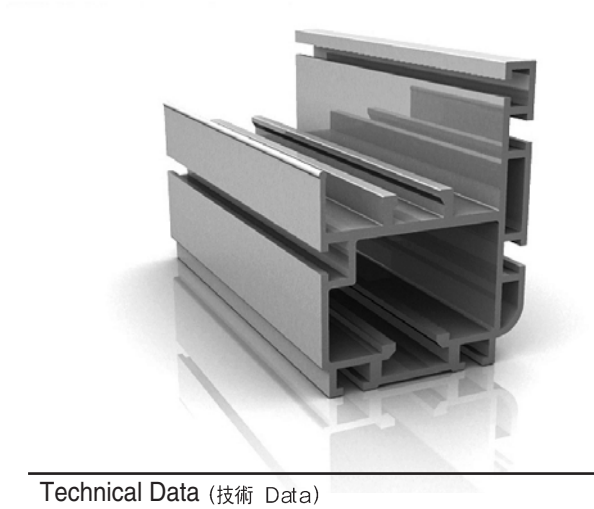

CAD Drawing

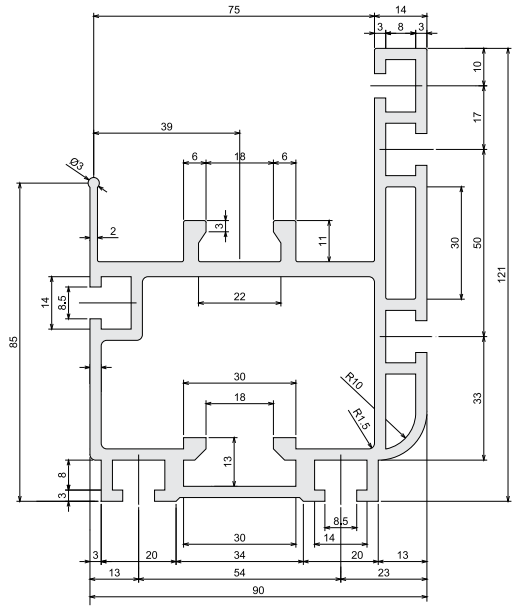

Technical Data (技術 Data)	
Material (材質)	A6063-T5
Surface Processing (表面處理)	Anodized
Weight (重量)	5.038kg/m
Section Area (斷面積)	1,859.0040mm²
Application (用途)	RF2060 chain conveyor frame (체인 컨베어 프레임)

CONVEYOR DC 125100 125 X 100

ORDER NUMBER **DY 5072**

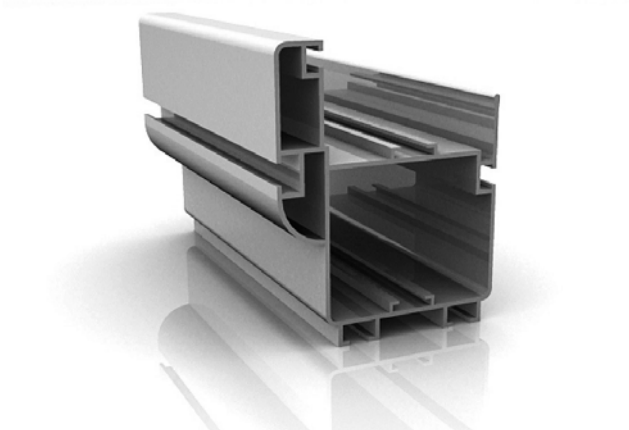

CAD Drawing

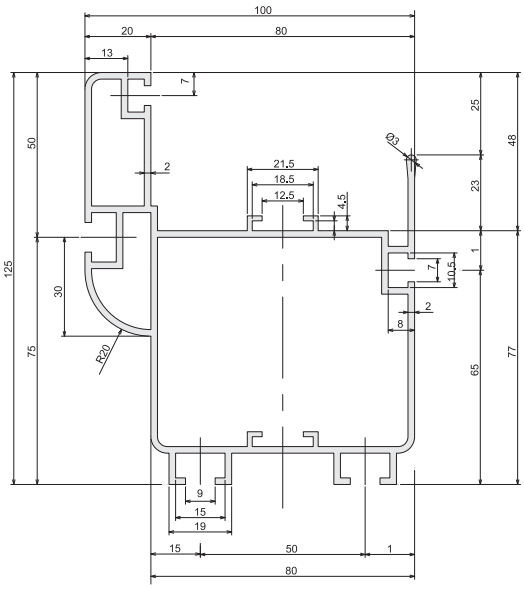

Technical Data (技術 Data)	
Material (材質)	A6063-T5
Surface Processing (表面處理)	Anodized
Weight (重量)	3.218kg/m
Section Area (斷面積)	1,187.2812mm²
Application (用途)	RF2060 chain conveyor frame (체인 컨베어 프레임)

CONVEYOR DY 1145 100 X 125

ORDER NUMBER **DY 1145**

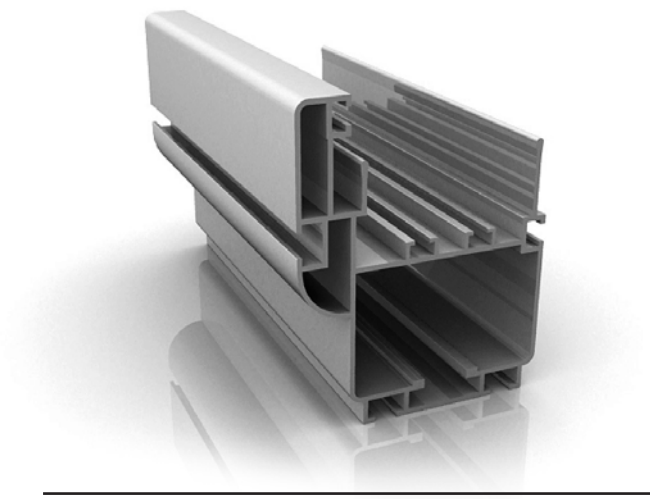

CAD Drawing

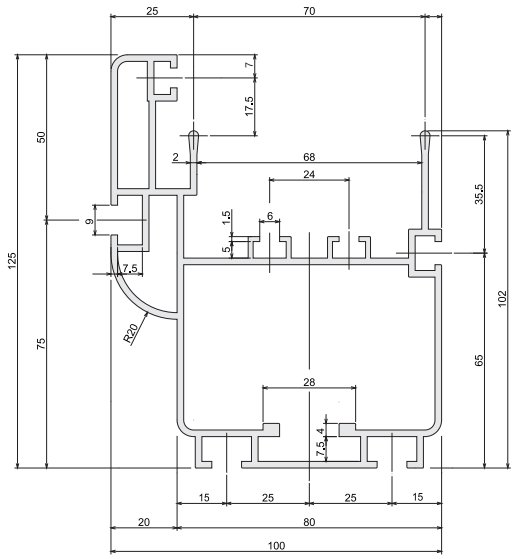

Technical Data (技術 Data)	
Material (材質)	A6063-T5
Surface Processing (表面處理)	Anodized
Weight (重量)	3.468kg/m
Section Area (斷面積)	1,297.7532mm^2
Application (用途)	RF2060 chain conveyor frame (체인 컨베어 프레임)

CONVEYOR DY 1031 125 X 100

ORDER NUMBER **DY 1031**

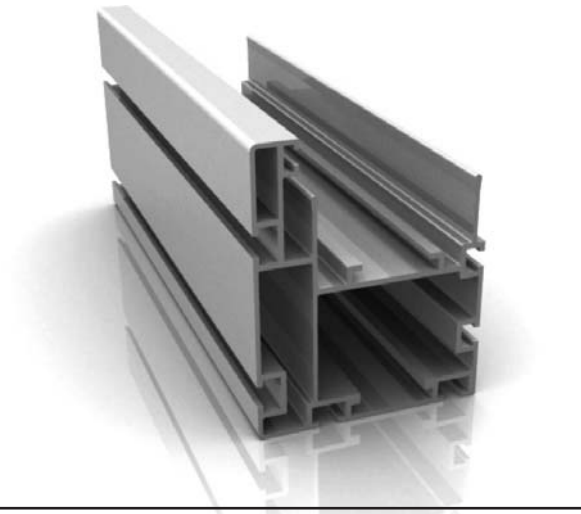

CAD Drawing

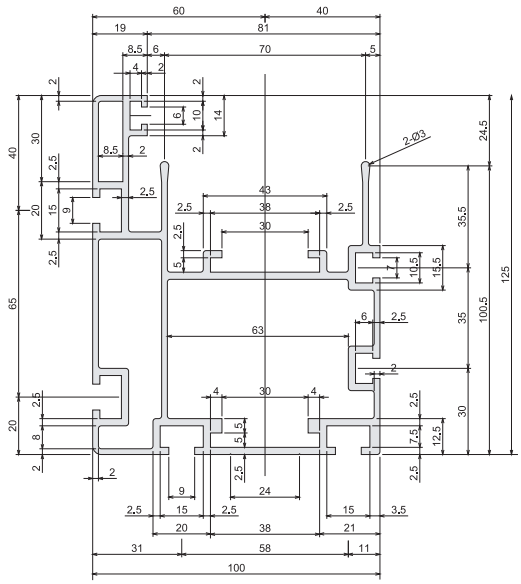

Technical Data (技術 Data)	
Material (材質)	A6063-T5
Surface Processing (表面處理)	Anodized
Weight (重量)	4.516kg/m
Section Area (斷面積)	1,657.0502mm^2
Application (用途)	RF2060 chain conveyor frame (체인 컨베어 프레임)

CONVEYOR DY 1054 80 X 136

ORDER NUMBER **DY 1054**

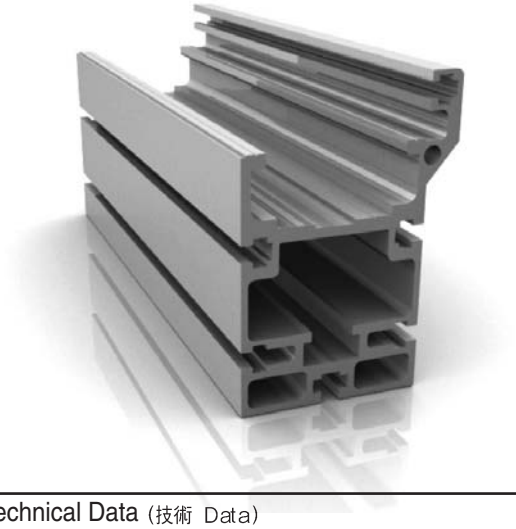

CAD Drawing

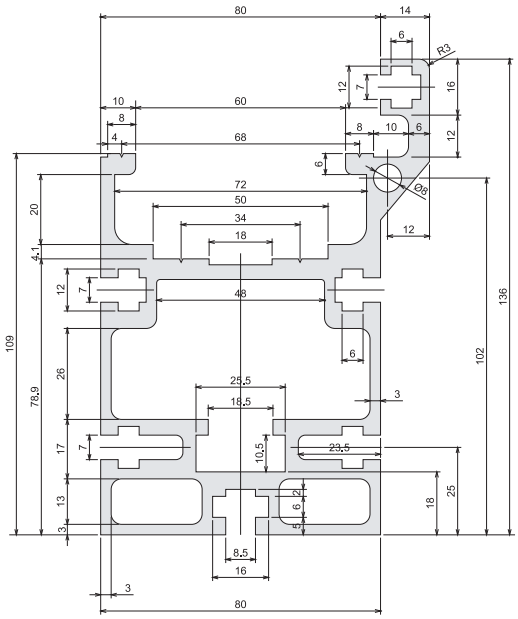

Technical Data (技術 Data)	
Material (材質)	A6063-T5
Surface Processing (表面處理)	Anodized
Weight (重量)	6.974kg/m
Section Area (斷面積)	2,573.4644mm^2
Application (用途)	RF2060 chain conveyor frame (체인 컨베어 프레임)

CONVEYOR DY 1248 20 X 75

ORDER NUMBER **DY 1248**

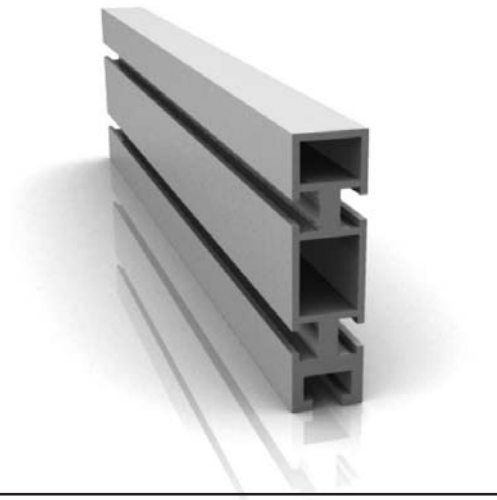

CAD Drawing

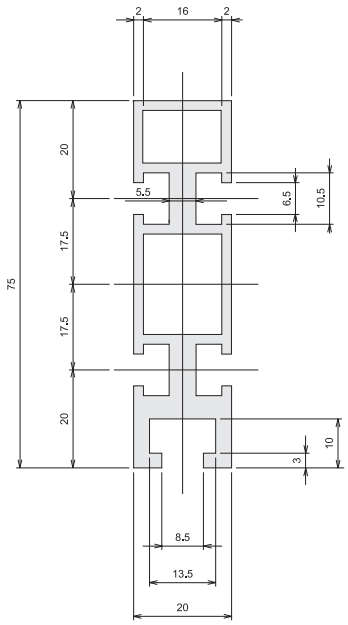

Technical Data (技術 Data)	
Material (材質)	A6063-T5
Surface Processing (表面處理)	Anodized
Weight (重量)	1.646kg/m
Section Area (斷面積)	607.5000mm^2
Application (用途)	RF2060 chain conveyor frame (체인 컨베어 프레임)

CONVEYOR DY 1886 80 X 166

ORDER NUMBER **DY 1886**

CAD Drawing

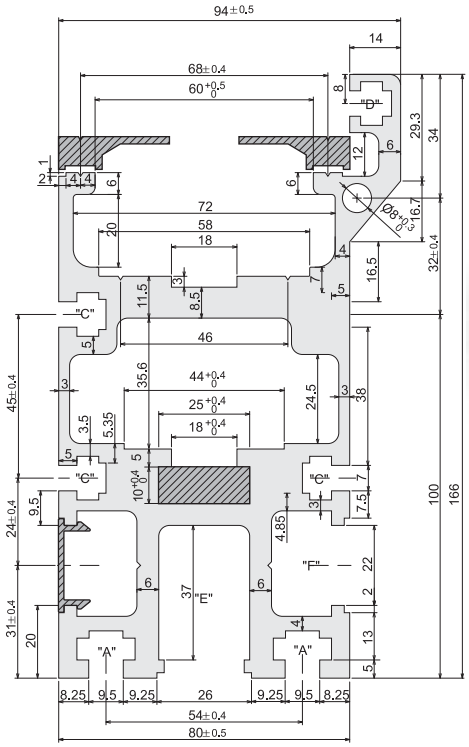

Technical Data (技術 Data)	
Material (材質)	A6063-T5
Surface Processing (表面處理)	Anodized
Weight (重量)	10.604kg/m
Section Area (斷面積)	3,913.0687mm²
Application (用途)	RF2060 chain conveyor frame (체인 컨베어 프레임)

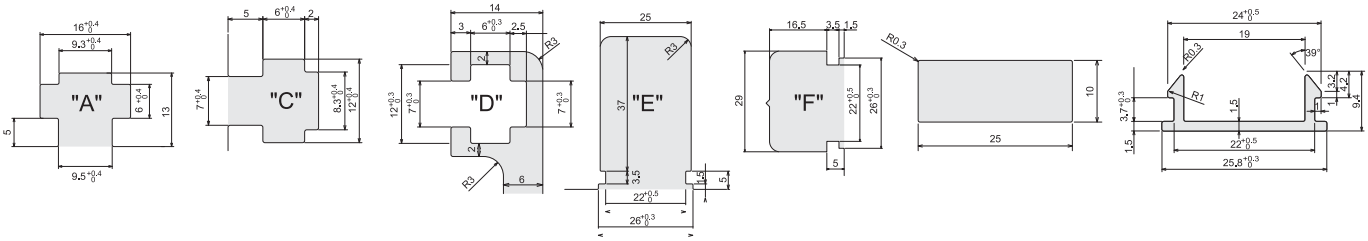

CONVEYOR DY 1055

ORDER NUMBER **DY 1055**

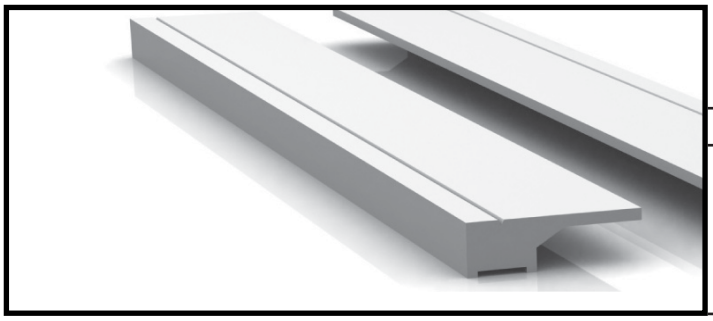

Technical Data (技術 Data)	
Material (材質)	A6063-T5
Surface Processing (表面處理)	Anodized
Weight (重量)	0.389kg/m
Section Area (斷面積)	143.6108mm²
Application (用途)	RF2060 chain conveyor frame (체인 컨베어 프레임)